# KOSNER MX22 compressor - Chassis

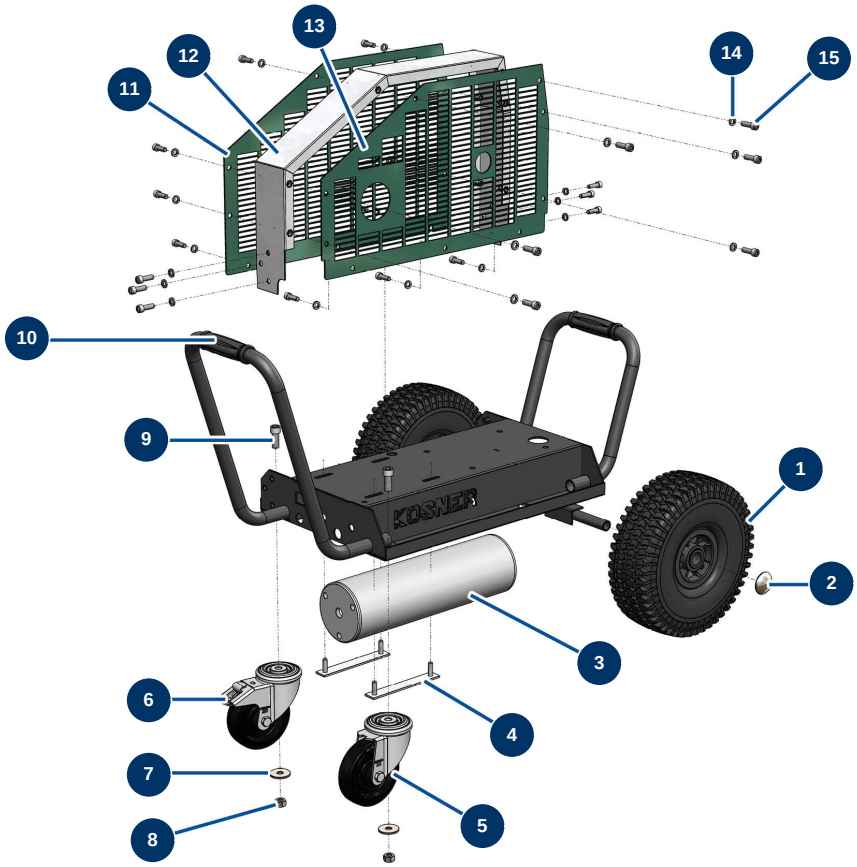


## Détails des pièces

| Pos. | Référence | Désignation |
|---|---|---|
| 1 | K008157 | |
| 2 | 90282 | Ø25 chromed clip |
| 3 | C23427 | 3 |
| 4 | C23430 | 4 |
| 5 | K008348 | |
| 6 | K008347 | |
| 7 | 30294 | ø 12 inox large washer |
| 8 | 30071 | Nut M 12 |
| 9 | 12498 | 12 x 30 cylindrical head screw |
| 10 | 90255 | Arm handle for EUROPRO 24P, E50 and E100 |
| 11 | C23401 | 11 |
| 12 | C23400 | |
| 13 | C23402 | 13 |

| Pos. | Référence | Désignation |
|---|---|---|
| 14 | 80269 | Grower washer ø 8 |
| 15 | 12783 | 8 x 25 cylindrical head screw |

# KOSNER MX22 compressor - Air group

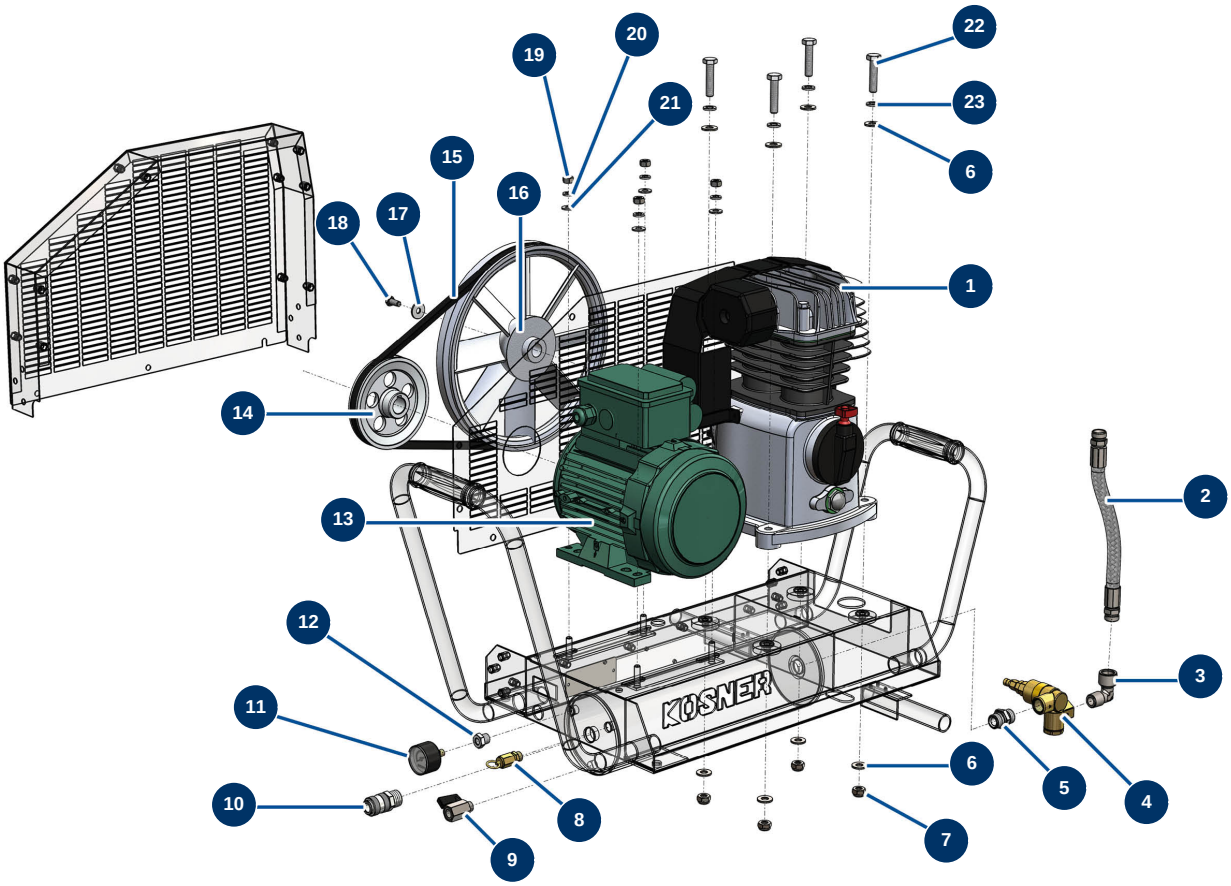


## Détails des pièces

| Pos. | Référence | Désignation |
|---|---|---|
| 1 | K100311 | KOSNER MX22 compression head |
| 2 | | 2 |
| 3 | 90483 | Elbow BP 90° 1/2 MaleC x 1/2 FemaleD |
| 4 | 80076 | 1/2" autonomous drain valve |
| 5 | 90627 | 1/2" MaleD x 1/2" MaleD high-pressure nipple |
| 6 | 80261 | ø 10 inox medium washer |
| 6 | 80261 | ø 10 inox medium washer |
| 7 | 13981 | M 10 nylstop inox nut |
| 8 | 80097 | 1/4" certified outer threaded safety valve 11 bar |
| 9 | 30135 | 1/4" mini lux valve |
| 10 | K000457 | |
| 11 | 80023 | Axial manometer 1/8 conical 40 mm 0 to 10 bar |
| 12 | 20084 | 1/4" MaleD x 1/8" FemaleD high-pressure reduction |

| Pos. | Référence | Désignation |
|---|---|---|
| 13 | K100041 | Foot mounted electric motor  2,4 kW - T90 - B3 - 2800 rpm - 230V |
| 14 | K100134 | |
| 15 | | 15 |
| 16 | 30254 | EUROPRO 68 head pulley |
| 17 | 30292 | ø 8 inox large washer |
| 18 | 30273 | THEF  8 x 20 screw |
| 19 | 14075 | M 8 inox nut |
| 20 | 80269 | Grower washer ø 8 |
| 21 | 80260 | ø  8 inox medium washer |
| 22 | 12441 | THEF 10 x 45 screw |
| 23 | 80270 | Grower washer ø 10 |

# KOSNER MX22 compressor - Electricity group

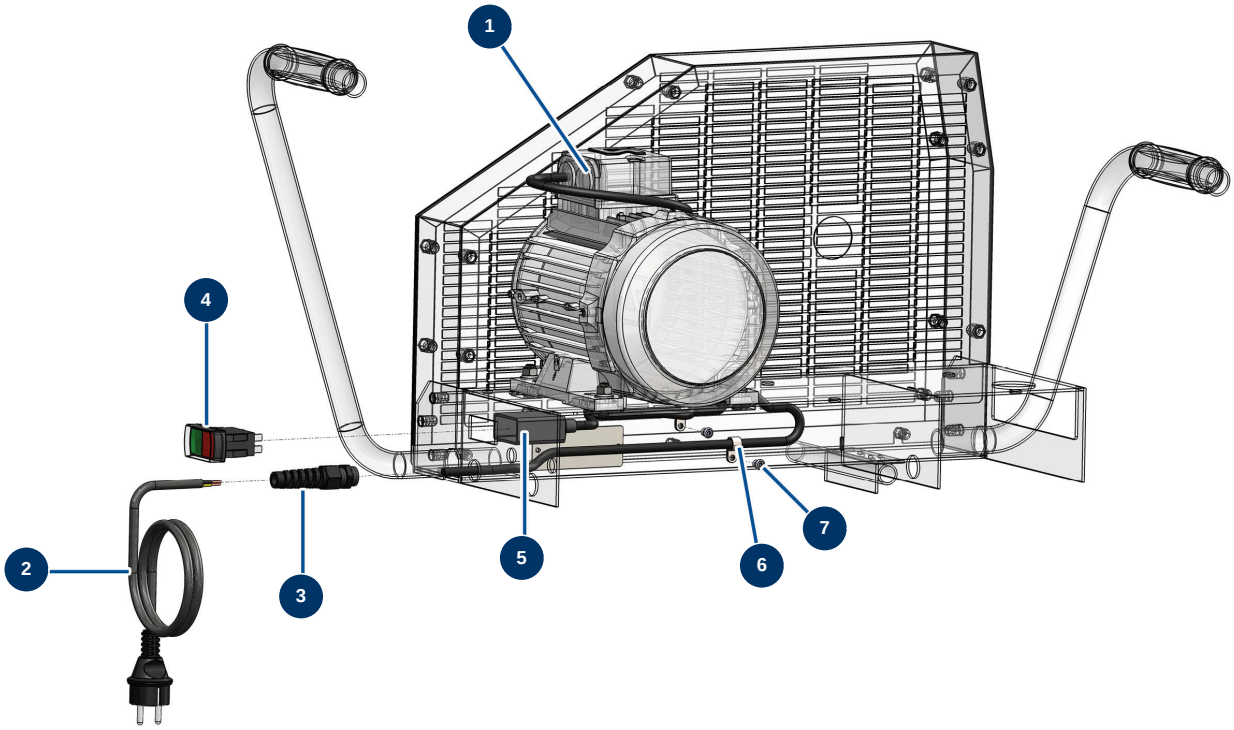


## Détails des pièces

| Pos. | Référence | Désignation |
|---|---|---|
| 1 | K100041 | Foot mounted electric motor  2,4 kW - T90 - B3 - 2800 rpm - 230V |
| 2 | 90214 | Power cable with molded plug 3G 2,5 mm² |
| 3 | 90601 | 11 black spiral cable gland |
| 4 | K008522 | |
| 5 | K100318 | |
| 6 | 90792 | Cable support Ø 14.3 |
| 7 | 12463 | ø 5 x 16 aluminium POP rivet |