EUROSPRAY PULSE airless diaphragm pump - Chassis

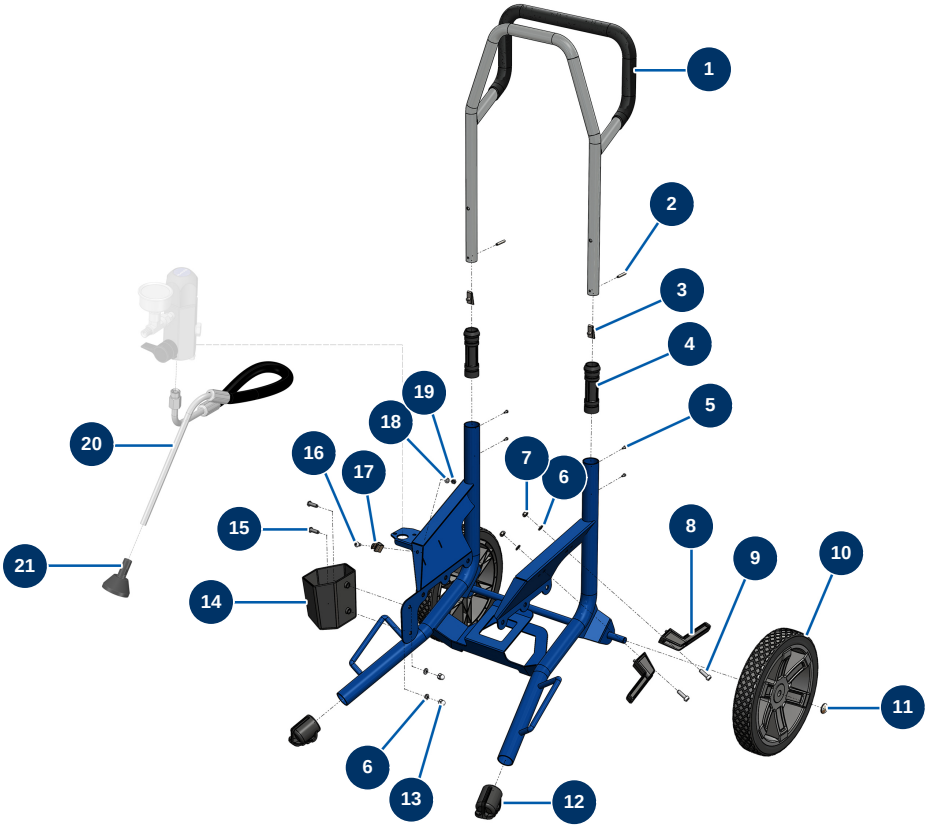

Détails des pièces

Pos.	Référence	Désignation
1	51176	EUROSPRAY S, L & PULSE & PULSE arm
2	51175	EUROSPRAY S, L & PULSE arm spring button fixing pin
3	51355	Arm sleeve spring button for EUROSPRAY S & XL pump
4	51146	EUROSPRAY S, L & PULSE arm sleeve
5	51153	EUROSPRAY S arm sleeve M3x4 screw
6	70087	ø 6 inox narrow washer
6	70087	ø 6 inox narrow washer
7	14217	M 6 nylstop inox nut
8	51148	EUROSPRAY S, L & PULSE power cable support
9	90996	6 x 20 inox cylindrical head screw
10	51145	EUROSPRAY S, L & PULSE wheel
11	51149	EUROSPRAY S, L & PULSE wheel clip
12	51147	EUROSPRAY S, L & PULSE foot plug

Pos.	Référence	Désignation
13	30330	M 6 Inox cap nut
14	51168	EUROSPRAY S Mini suction rod support
15	12110	6 x 20 inox cylindrical pan head screw
16	15097	5 x 10 inox cylindrical pan head screw
17	51151	EUROSPRAY S Mini, S & L tip extension fastening clip
18	70085	ø 5 narrow washer
19	11880	M 5 nylstop nut
20	51170	EUROSPRAY S Mini return hose
21	51171	EUROSPRAY S Mini, S & L return hose deflector

EUROSPRAY PULSE airless diaphragm pump - Pump

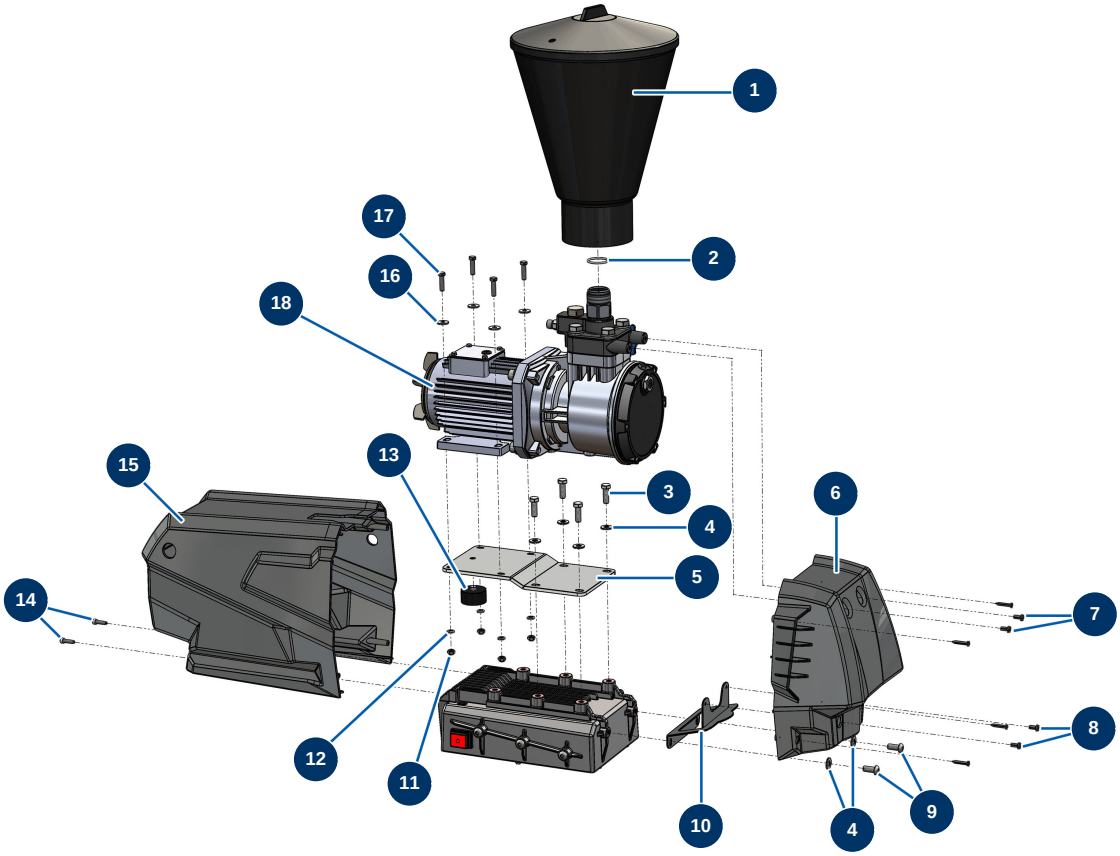

Détails des pièces

Pos.	Référence	Désignation
1	51607	6-litre F36x2 bucket with lid for EUROSPRAY PULSE diaphragm pump
2	15215	30 x 2 O-ring
3	11544	THEF 8 x 25 screw
4	80260	ø 8 inox medium washer
4	80260	ø 8 inox medium washer
5	C23618	5
6	51305	EUROSPRAY XL front cover
7	12112	6 x 12 cylindrical head screw
8	90161	5 x 12 inox cylindrical head screw
9	12111	8 x 20 inox cylindrical pan head screw
10	C23619	10
11	14217	M 6 nylstop inox nut
12	70087	ø 6 inox narrow washer

Pos.	Référence	Désignation
13	30145	Ø 40 x 20 M10 stop
14	12863	5 x 20 inox cylindrical head screw
15		15
16	30291	ø 6 large washer
17	14218	THEF 6 x 25 inox screw
18	51602	18

EUROSPRAY PULSE airless diaphragm pump - Cylinder head

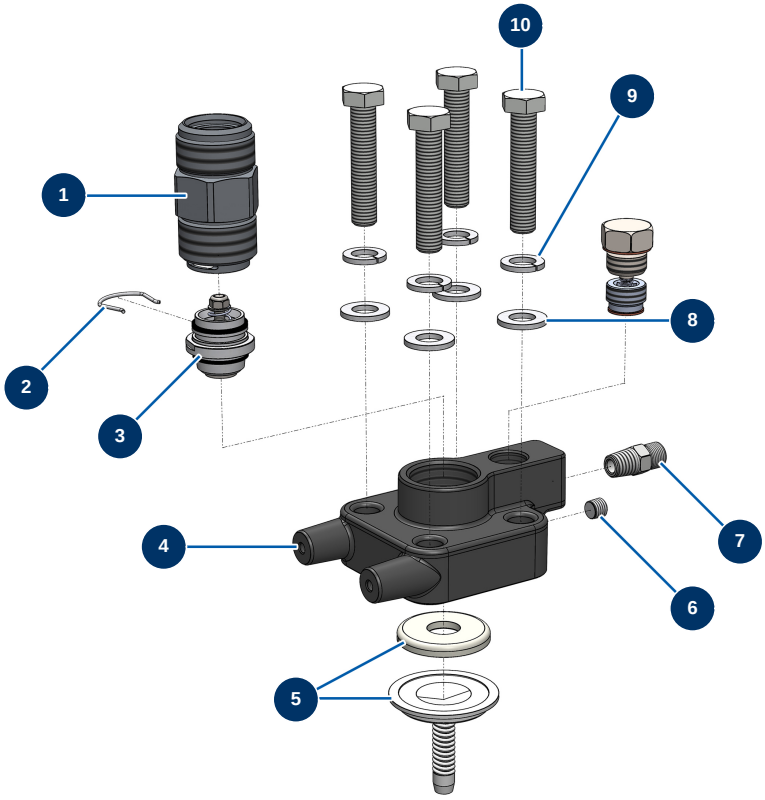

Détails des pièces

Pos.	Référence	Désignation
1	M10843	
2	51604	Valve retaining clip for EUROSPRAY PULSE diaphragm pump
3	15118	
4	51601	Cylinder head for EUROSPRAY PULSE diaphragm pump
5	51612	
6	51603	HP 1/8" M headless plug for EUROSPRAY PULSE diaphragm pump
7	80512	1/4" MaleC x 1/4" MaleD high-pressure nipple
8	30281	ø 12 inox narrow washer
9	12462	Grower washer ø 12
10	30263	THEF 12 x 60 screw

EUROSPRAY PULSE airless diaphragm pump - Paint filter

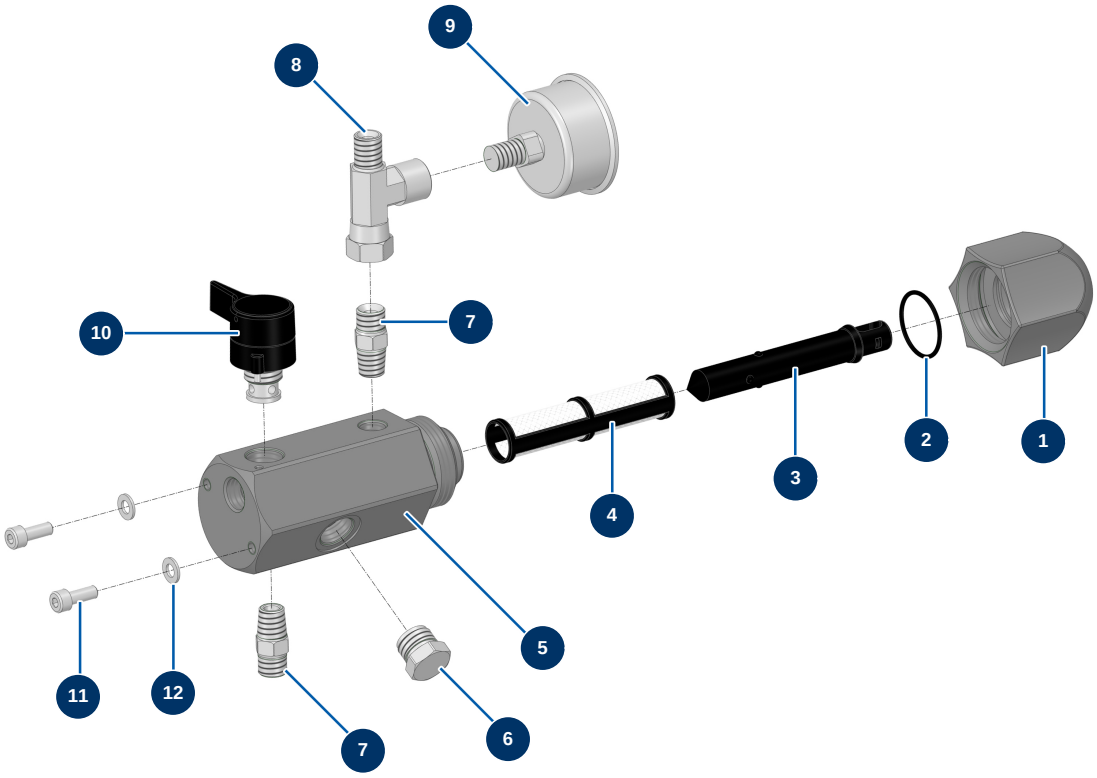

Détails des pièces

Pos.	Référence	Désignation
1	51130	EUROSPRAY S Mini, S, L & PULSE pump filter plug
2	51131	EUROSPRAY S Mini, S, L & PULSE pump filter O-ring
3	51132	EUROSPRAY S Mini, S, L & PULSE pump filter support
4	51133	EUROSPRAY S Mini, S, L & PULSE 60 mesh pump filter
5	51134	EUROSPRAY S Mini, S, L & PULSE pump filter body
6	51606	Filter sensor plug for EUROSPRAY PULSE diaphragm pump
7	51123	EUROSPRAY S Mini, S, L & PULSE pump HP 1/4" M nipple
7	51123	EUROSPRAY S Mini, S, L & PULSE pump HP 1/4" M nipple
8	51611	Manometer T-connection for EUROSPRAY PULSE diaphragm pump
9	51618	EUROSPRAY PULSE pump manometer
10	51136	EUROSPRAY S Mini, S, L & PULSE pump complete drain valve
11	90157	M6 x 16 cylindrical head screw - CP 60
12	70087	ø 6 inox narrow washer

EUROSPRAY PULSE airless diaphragm pump - Spray-gun

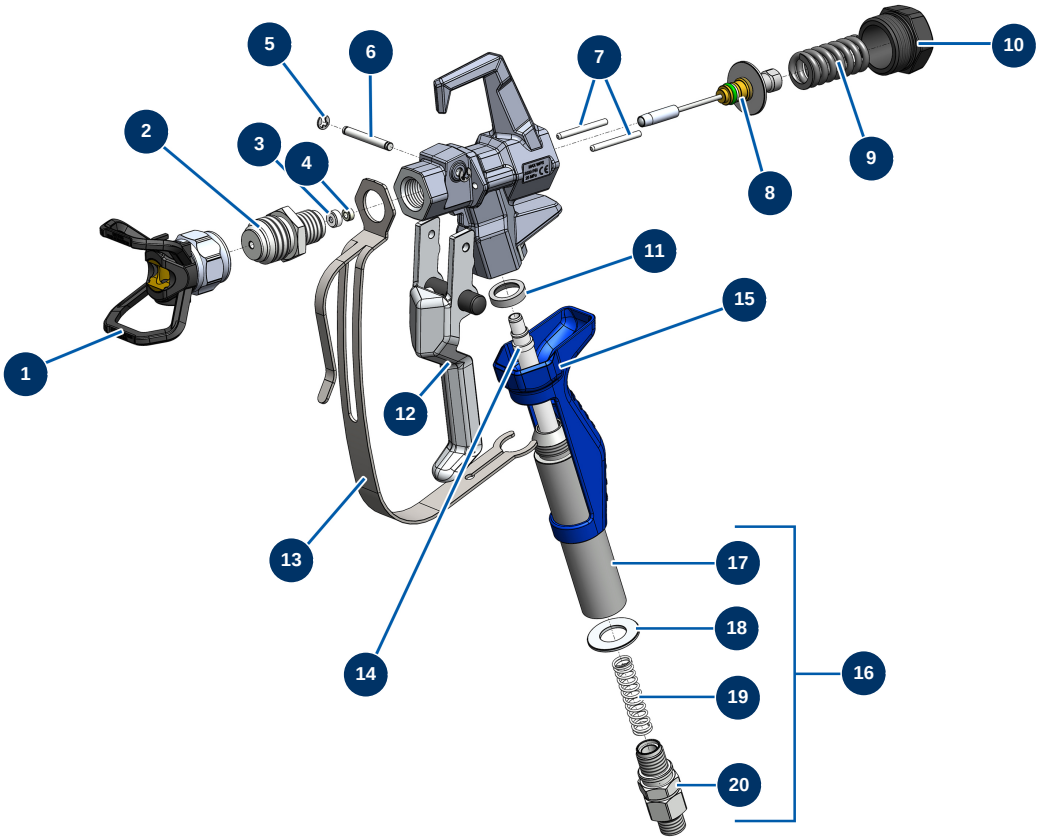

Détails des pièces

Pos.	Référence	Désignation
1	51001	BST, BBP & BFF 7/8" tip guard
2	51036	PAINTSPRAY spray-gun 7/8" diffuser
3	51047	PAINTSPRAY, COATSPRAY spray-gun needle seat gasket
4	51046	PAINTSPRAY, COATSPRAY spray-gun needle seat
5	51043	PAINTSPRAY, COATSPRAY spray-gun trigger axis circlip
6	51042	PAINTSPRAY spray-gun trigger axis
7	51040	PAINTSPRAY spray-gun retraction pin
8	51033	PAINTSPRAY spray-gun needle repair kit
9	51034	PAINTSPRAY,COATSPRAY spray-gun needle return spring
10	51038	PAINTSPRAY, COATSPRAY spray-gun needle lock plug
11	51031	PAINTSPRAY spray-gun filter holder bearing gasket
12	51039	PAINTSPRAY spray-gun complete trigger
13	51032	PAINTSPRAY spray-gun trigger protection

Pos.	Référence	Désignation
14	51003	Spray-gun grip 50-mesh filter
15	51037	PAINTSPRAY spray-gun plastic handle
16	51048	Complete revolving coupling for PAINTSPRAY spray-gun
17	51035	PAINTSPRAY spray-gun filter holder
18	51045	PAINTSPRAY, COATSPRAY spray-gun revolving coupling gasket
19	51041	PAINTSPRAY spray-gun filter holding spring
20	51044	1/4" MBSP revolving coupling for PAINTSPRAY spray-gun

EUROSPRAY PULSE airless diaphragm pump - Options

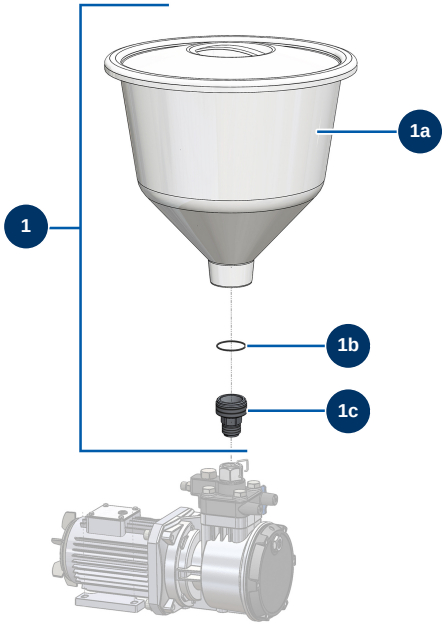

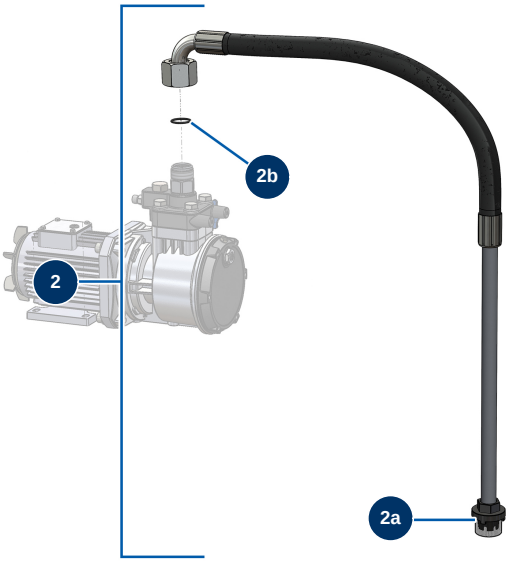

Détails des pièces

Pos.	Référence	Désignation
1	51610	35-litre F2" complete bucket for EUROSPRAY PULSE diaphragm pump
1a	51608	35-litre F2" bucket with lid for EUROSPRAY PULSE diaphragm pump
1b	15216	53 x 2 O-ring
1c	51614	
2	51613	Complete suction rod for EUROSPRAY PULSE diaphragm pump.
2a	51155	EUROSPRAY S Mini & S suction strainer
2b	11719	O-ring 24 X 2