COMPACT-PRO 25 CLASSIC V3 spraying machine - Chassis

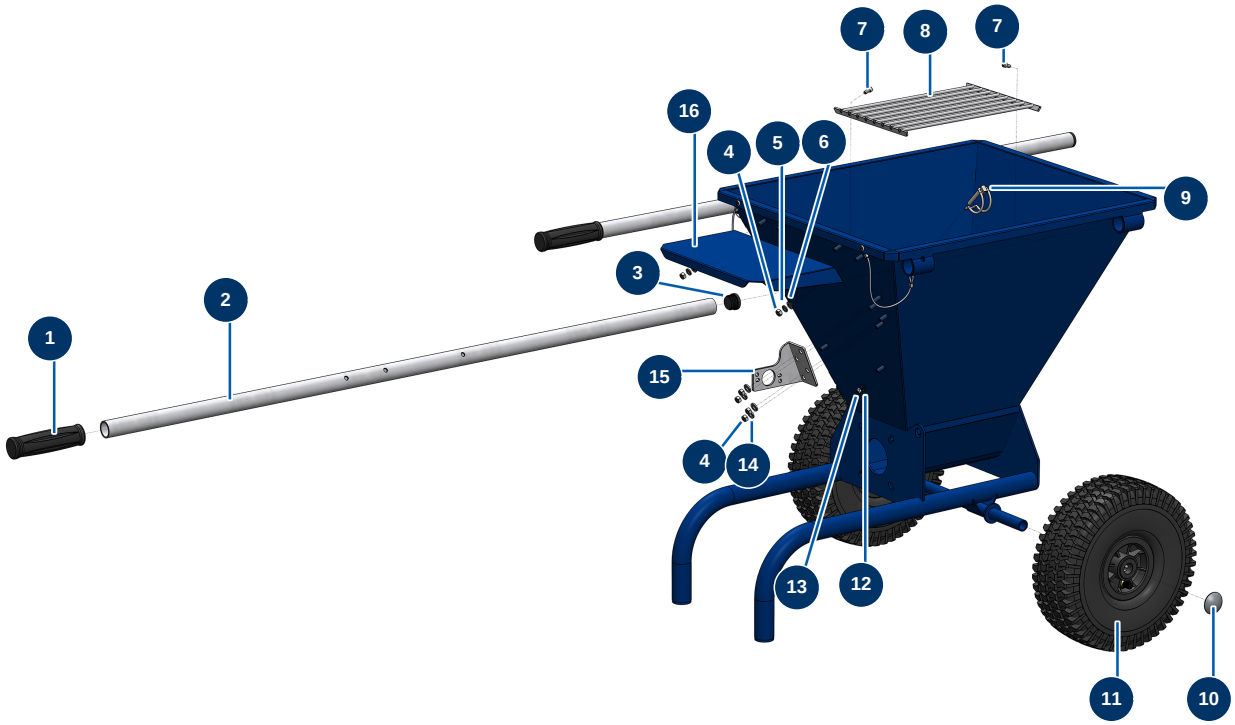

Détails des pièces

Pos.	Référence	Désignation
1	K100047	
2	C23593	2
3	90870	Black plastic end cap for ø 25 round tube
4	10038	M 6 nut
4	10038	M 6 nut
5	80268	Grower washer Ø 6 - C.P 60
6	80259	Ø 6 medium washer
7	90145	5 x 10 cylindrical head screw
7	90145	5 x 10 cylindrical head screw
8	C23485	
9	90571	Arm pin for 24P
10	90281	Ø20 chromed clip
11	90692	Complete wheel 300 shaft of 20

Pos.	Référence	Désignation
12	70085	ø 5 narrow washer
13	70086	M 5 nylstop inox nut
14	80269	Grower washer ø 8
15	C23592	15
16	C23456	16

COMPACT-PRO 25 CLASSIC V3 spraying machine - Transmission

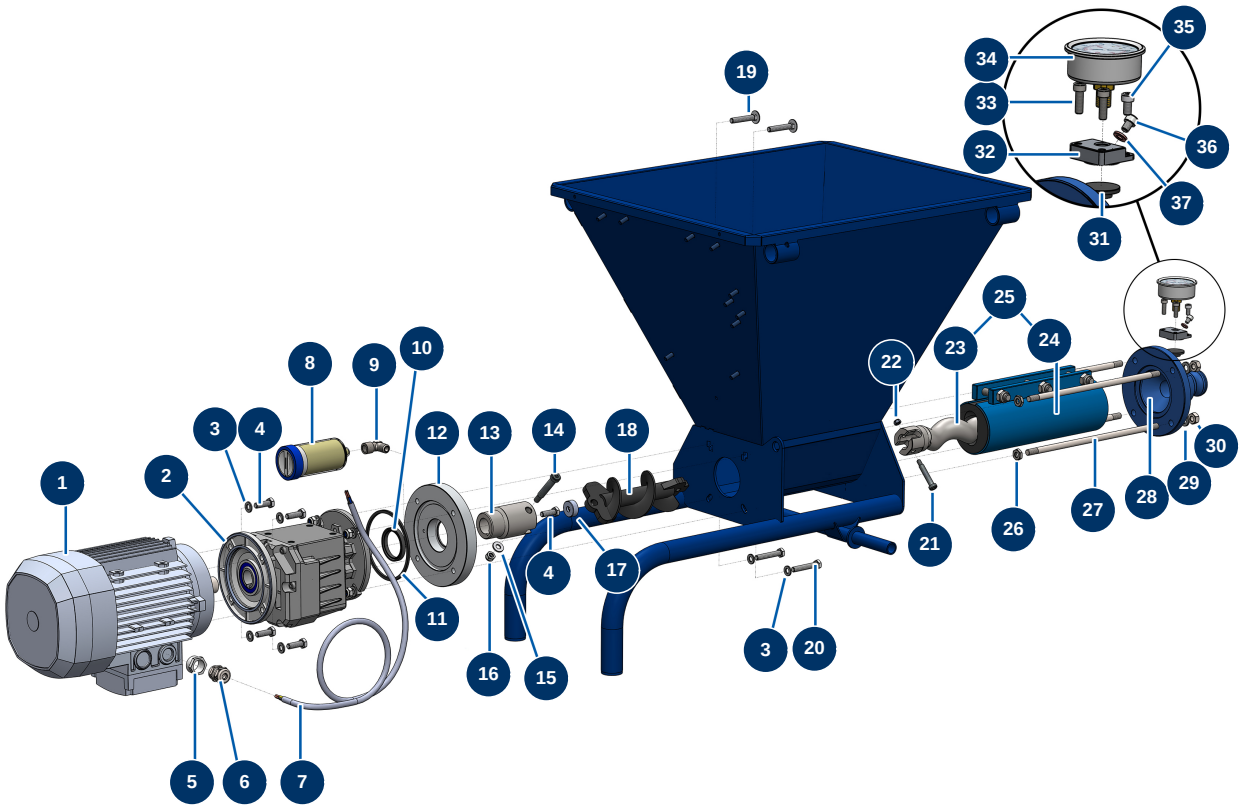

Détails des pièces

Pos.	Référence	Désignation
1	30044	Electric motor 1,85 kW - T90 - B14 - 1400 rpm - 400V
2	15155	Coaxial speed reducer - T412A - R18,04 - B14/T90
3	30256	ø 8 inox narrow washer
3	30256	ø 8 inox narrow washer
4	11208	4
4	11208	4
5	80599	Cable gland reduction M 25-13
6	80448	M 20 waterproof cable gland
7	90606	Shielded cable 4 x 1,5 by the metre
8	90639	Automatic greaser
9	30121	90° low-pressure elbow 1/4 MaleC x 1/4 FemaleD
10	15154	Spi seal 42 x 52 x 7
11	13692	CP25 motor flange seal

Pos.	Référence	Désignation
12	M10510	CP25 motor flange
13	M10811	Drive shaft for CP 25 CLASSIC V3
14	11359	CP 30 transmission shaft screw pin
15	80260	ø 8 inox medium washer
16	13980	M 8 nylstop inox nut
17	M10103	
18	C23616	
19	13603	Round head square neck stainless steel screw 8 x 50
20	90998	THEF 8 x 50 screw
21	90520	CP 30 rotor screw pin
22	14217	M 6 nylstop inox nut
23	MI7009107300	EUROPRO MAP 5/6 pump rotor CP30-type head
24	MI3F00529400	EUROPRO MAP 6 D8-1,5 adjustable pump stator
25	30446	EUROPRO MAP 6 pump rotor/stator kit
26	13979	M10 flat inox nut
27	60010	Fastening tie rod for MAP 5/6
28	90125	EUROPRO 24 P and COMPACT-PRO 30 stator flange
29	30280	ø 10 inox narrow washer
30	13978	M10 inox nut
31	MI4920006000	Membrane
32	M10079	MIXPRO 14 cage cover
33	90996	6 x 20 inox cylindrical head screw
34	80070	Axial manometer 1/4" conical oil 50 mm 0 to 60 bar
35	12112	6 x 12 cylindrical head screw
36	12625	6 x 8 cylindrical head screw
37	12765	Copper seal for JETPRO 80 pump nose

COMPACT-PRO 25 CLASSIC V3 spraying machine - Air circuit

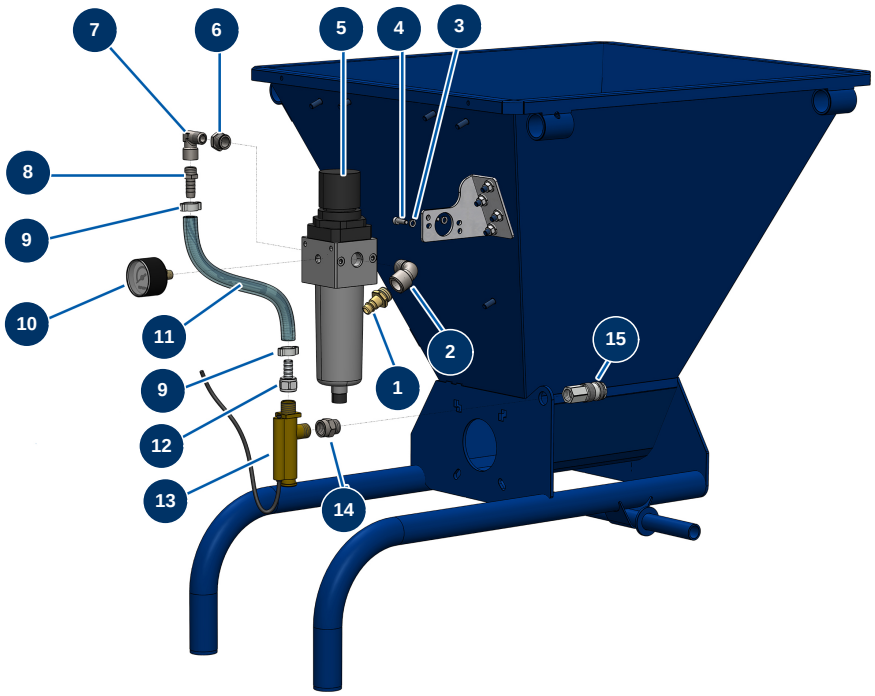

Détails des pièces

Pos.	Référence	Désignation
1	70044	3/8" outer threaded male quick fit coupling
2	30120	Elbow BP 90° 3/8 MaleC x 3/8 FemaleD
3	12458	Grower washer ø 5
4	90160	5 x 16 cylindrical head screw
5	90756	Superimposed 3/8" regulator filter
6	90242	3/8" MaleC x 1/4" FemaleD low-pressure reduction
7	30121	90° low-pressure elbow 1/4 MaleC x 1/4 FemaleD
8	80094	1/4" corrugated outer threaded coupling Ø 10
9	80429	Ear clamp 15 x 18
9	80429	Ear clamp 15 x 18
10	80023	Axial manometer 1/8 conical 40 mm 0 to 10 bar
11	50003	Clear braided PVC hose Ø 10 x 16 by the metre
12	70066	Rotating connector 3/8" corrugated Ø 10

Pos.	Référence	Désignation
13	30005	Flowmeter for EUROPRO 4-6-8-14 and 24 P
14	91053	3/8" MaleD x 3/8" FemaleD low-pressure nipple
15	12007	F ball bearing quick-fit attachment 200 bars 3/8 F

COMPACT-PRO 25 CLASSIC V3 spraying machine - Electrical box

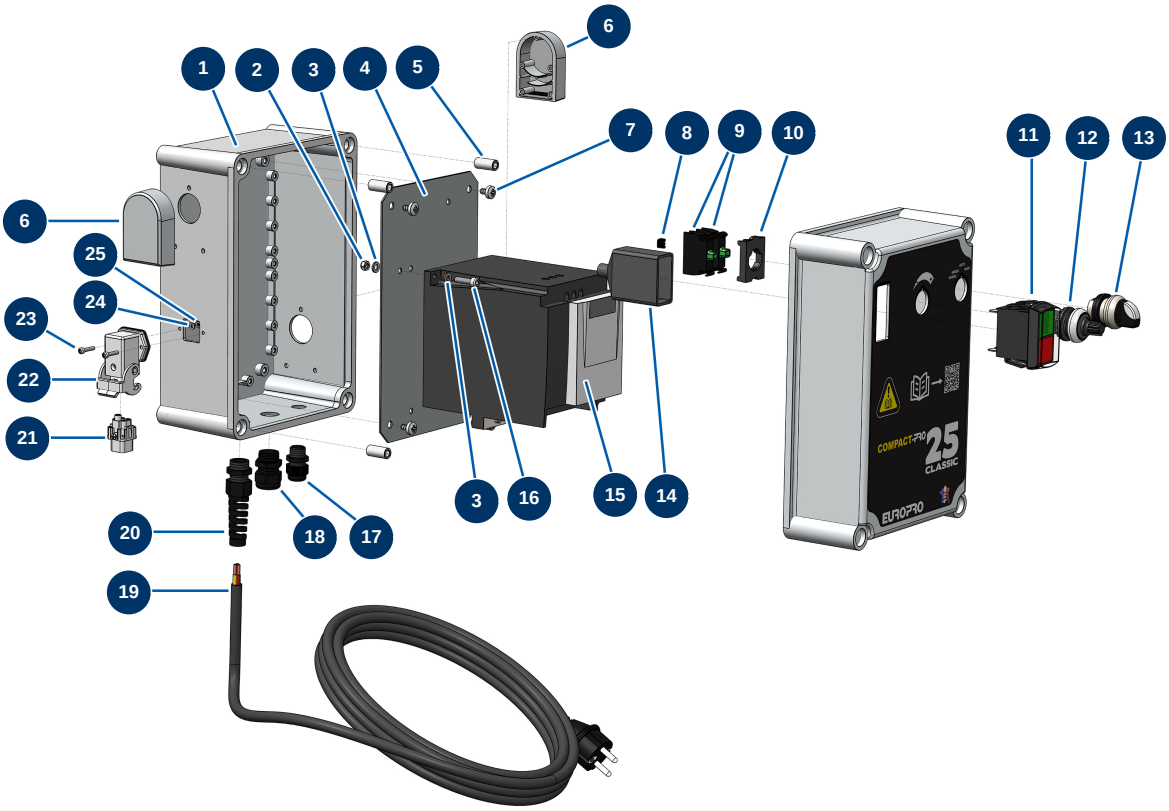

Détails des pièces

Pos.	Référence	Désignation
1	K008390	
2	70086	M 5 nylstop inox nut
3	70085	ø 5 narrow washer
3	70085	ø 5 narrow washer
4	C23411	4
5	M10826	5
6	K008274	
6	K008274	
7	K000600	
8	80644	Coding part for MOELLER button
9	30028	Green single closed contact
10	30036	3-contact U-bolt
11	K008522	

Pos.	Référence	Désignation
12	80645	Spraying machine complete potentiometer from MARCH 2003
13	90731	3-position button
14	K100318	
15	80458	Inverter 230 V - 1,5 kW
16	12863	5 x 20 inox cylindrical head screw
17	K008193	
18	11622	Black plastic packing M 20
19	90214	Power cable with molded plug 3G 2,5 mm²
20	K000264	
21	11914	Female insert 4p + G
22	12543	Insulating bend socket base 3p + G - 1 lever
23	12250	3 x 16 cylindrical head screw
24	12108	ø 3 inox narrow washer
25	12737	M 3 nylstop nut

COMPACT-PRO 25 CLASSIC V3 spraying machine - Hose

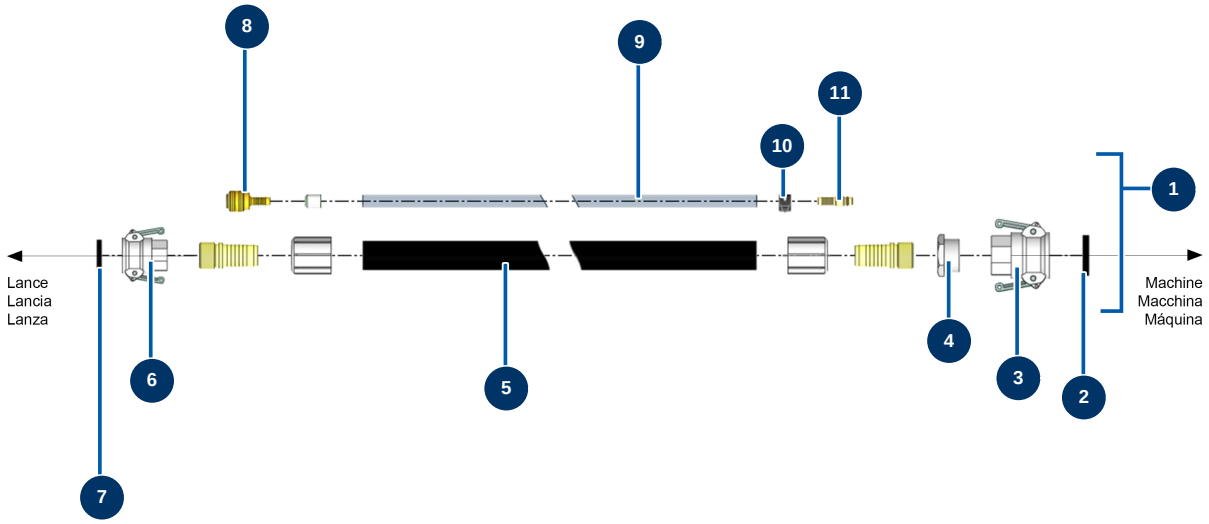

Détails des pièces

Pos.	Référence	Désignation
1	15281	ø 25 x 10 metres air product hose 1"1/4 x 1" alu couplings
2	70015	1"1/4 cam coupler gasket
3	70006	1"1/4 camlock alu coupling, inner threaded 1"1/4 for 24P
4	80157	1"1/4 MaleC x 1" FemaleD low-pressure reduction
5	10268	Spray hose 25 x 37 by the metre
6	70007	1" camlock alu coupling, inner threaded 1" for 6, 8, 14 & 24P
7	70014	1" cam coupler gasket
8	70004	Female quick fit coupling with corrugated shank of 9
9	50003	Clear braided PVC hose Ø 10 x 16 by the metre
10	12218	Spring collar Ø 15
11	70018	Corrugate male quick fit coupling of 9

COMPACT-PRO 25 CLASSIC V3 spraying machine - Spraying lance

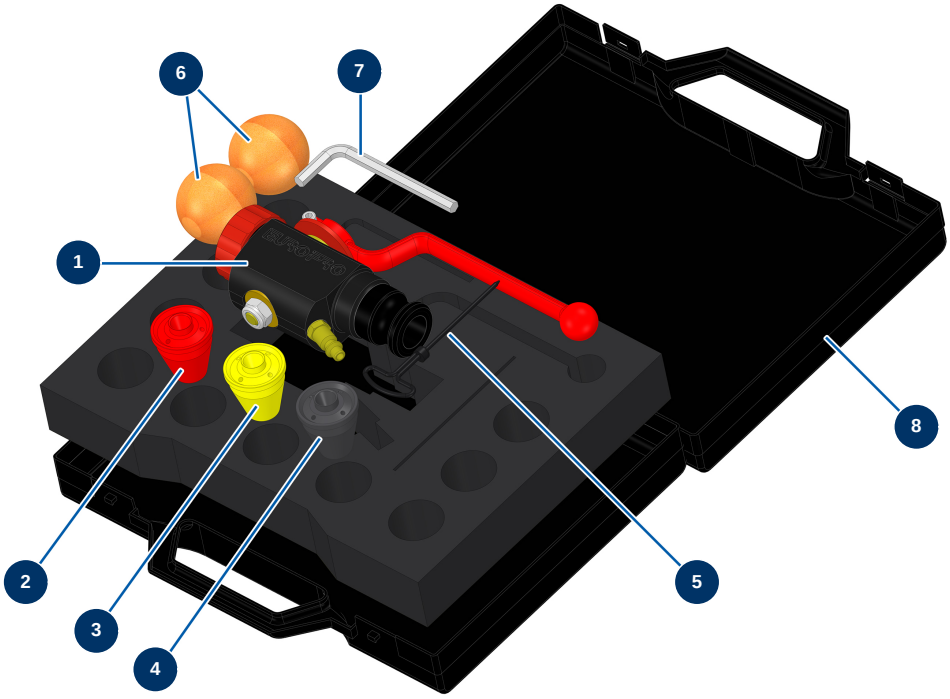

Détails des pièces

Pos.	Référence	Désignation
1	12270	8, 14 and 24P ABS spraying lance
2	10045	Red nozzle Ø 5mm
3	10046	Yellow nozzle Ø 6mm
4	10047	Anthracite nozzle Ø 7mm
5	90605	Tube brush
6	90566	Cleaning ball Ø 50
7	101013	7mm Allen key
8	90603	Empty case for lance