X-PRO D60 spraying machine - Chassis

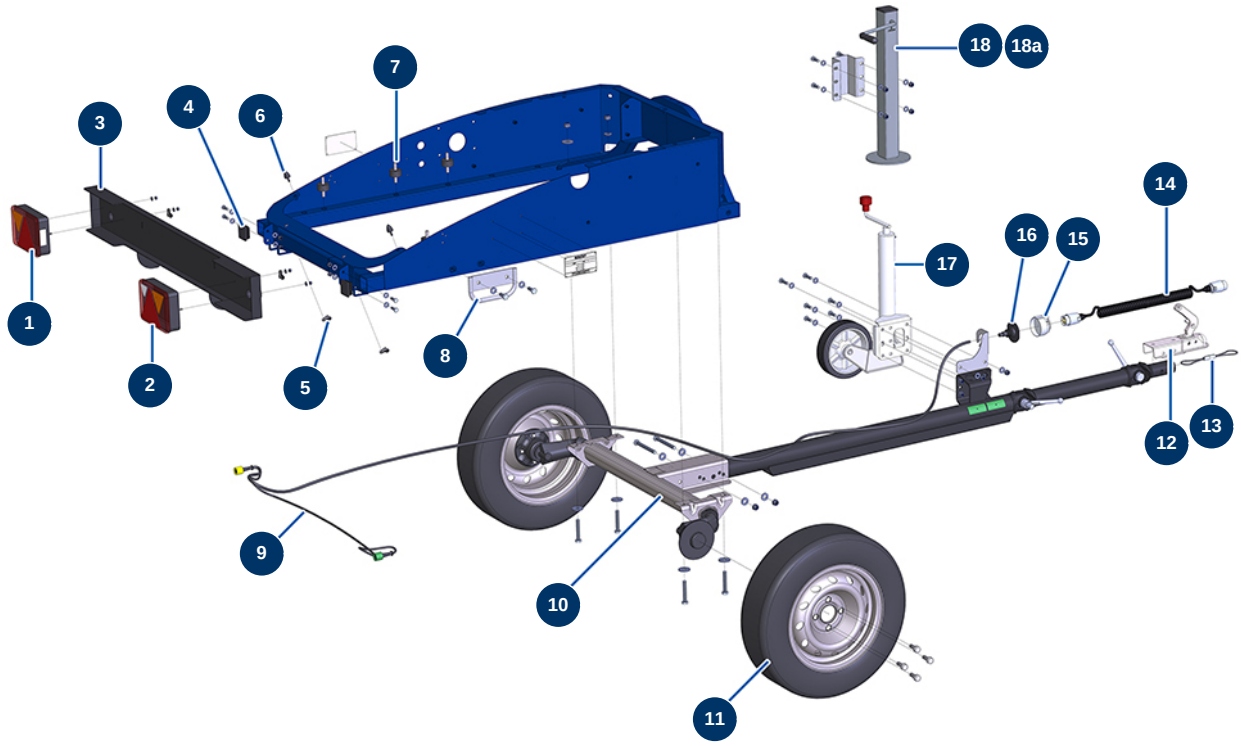

Détails des pièces

Pos.	Référence	Désignation
1	12802	Complete left rear lights - C.P 60
2	12803	Complete right rear lights - C.P 60
3	C22019	CP60 2017 light plate chassis
4	12665	Plastic end cap for 50 x 50 mm tube
5	12395	ø 10 cable collar - CP 60
6	14216	ø 20 x 24 M6 conical stop
7	30150	Silentbloc ø 40 x 20 M10
8	C20976	Chassis docking support CP 60 version 7.13
9	12801	Complete lighting wiring harness 3.5 m - C.P 60
10	13839	Axle 750 kg hub 98x4 EAB 715 AL-KO - CP 60
11	14885	Complete wheel 155/80 R13 98x4 - CP 60
12	12877	TZ sprocket Ø 50 ball towing head - C.P 60
13	14326	Headstock safety cable AK160 ø 50 nut PA - CP 60

Pos.	Référence	Désignation
14	13284	7-pin metal male sockets 2.5 m x 2 spiral extender - C.P 60
15	13282	Lighting metal 7-pin female socket - C.P 60
16	13283	Lighting metal 7-pin female socket foam rubber gasket - C.P 60
17	13905	Automatic jockey wheel 500 Kg - CP 60 & 80
18	14547	Stand option - X-PRO D60 to 85
18a	13106	Retractable stand - CP 60

X-PRO D60 spraying machine - Bodywork

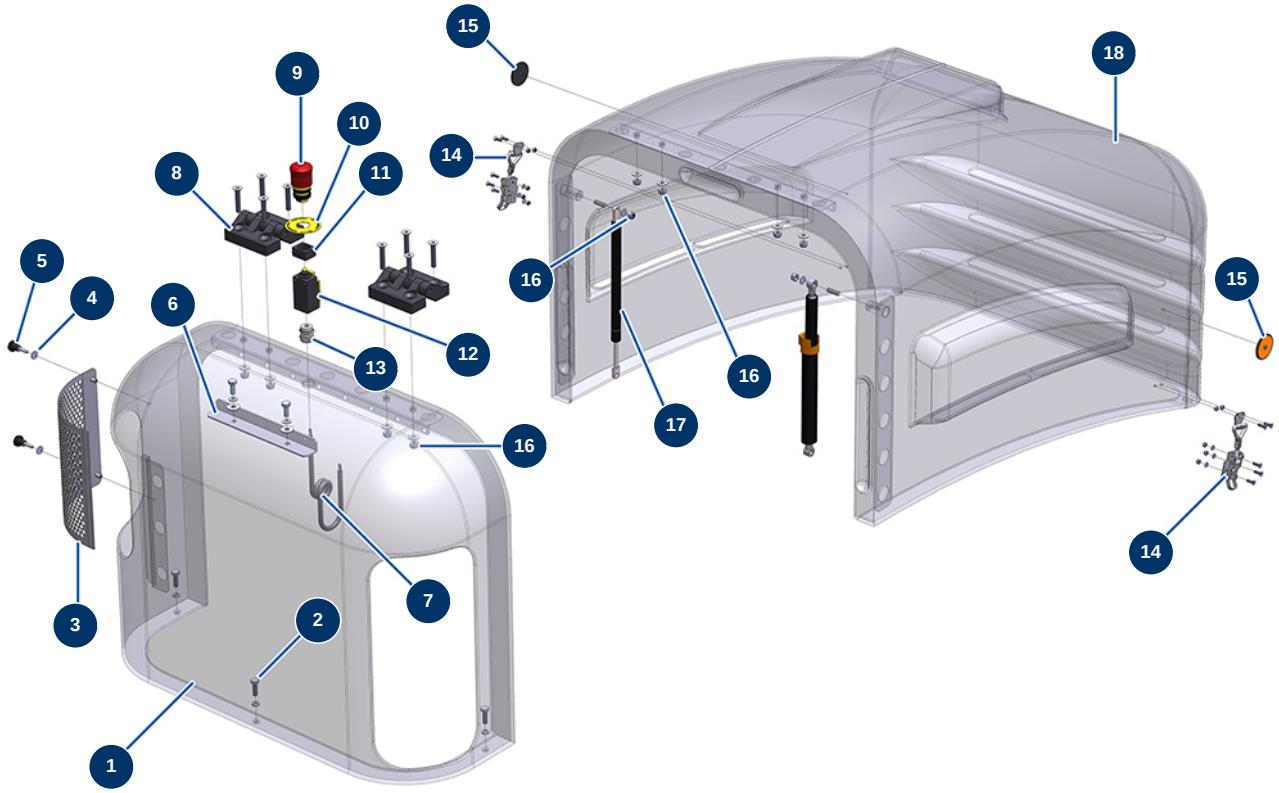

Détails des pièces

Pos.	Référence	Désignation
1	14413	CP 60, 70, 80 & 120 small model fixed bonnet
2	11544	THEF 8 x 25 screw
3	C20986	CP 60 hood removable lateral grid
4	30290	ø 5 large washer
5	12396	Plastic thumb wheel M5 x 20
6	C20866	Removable angle for hood reinforcement CP60 V17
7	11973	Electrical cable H05VVF 2x1 / sold by the meter
8	12797	Hood hinge - C.P 60
9	90727	Hook emergency stop button - CP 60
10	12824	Round sticker "Emergency stop" for CP 60
11	12664	Security switch adapter / emergency stop button - C.P 60
12	12663	Push safety switch - C.P. 60
13	80448	M 20 waterproof cable gland

Pos.	Référence	Désignation
14	13111	Large hood locking adjustable locking clamp - C.P 60
14	13111	Large hood locking adjustable locking clamp - C.P 60
15	12361	Round & orange reflector - C.P 60
15	12361	Round & orange reflector - C.P 60
16	90127	M 8 nylstop nut
16	90127	M 8 nylstop nut
16	90127	M 8 nylstop nut
17	80209	Mobile hood gas spring - C.P 60
18	14412	CP 60, 70, 80 & 120 large model mobile bonnet

X-PRO D60 spraying machine - Mudgards

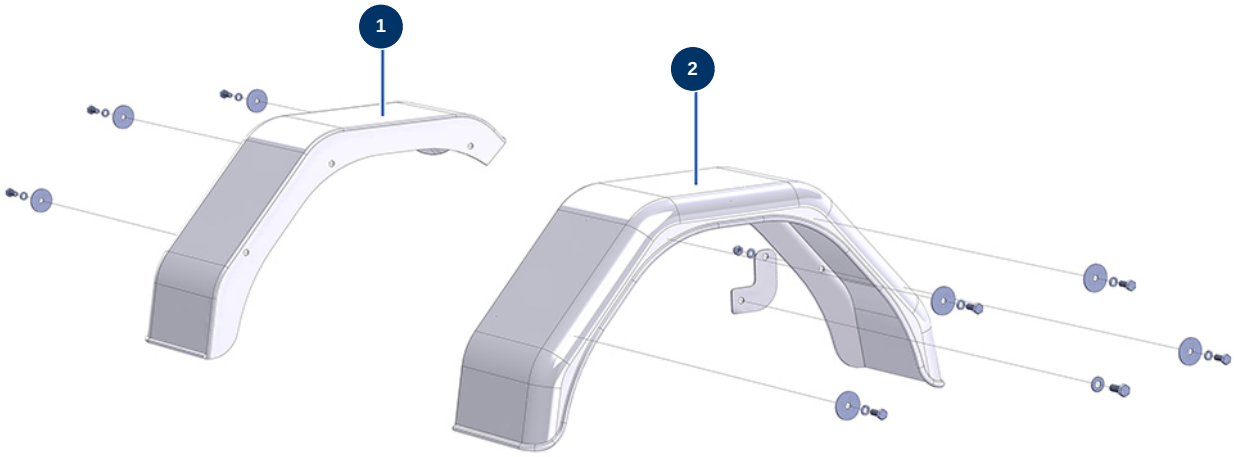

Détails des pièces

Pos.	Référence	Désignation
1	13093	Polyester left mudguard - C.P 60
2	13094	Polyester right mudguard - C.P 60

X-PRO D60 spraying machine - Hydraulic tank

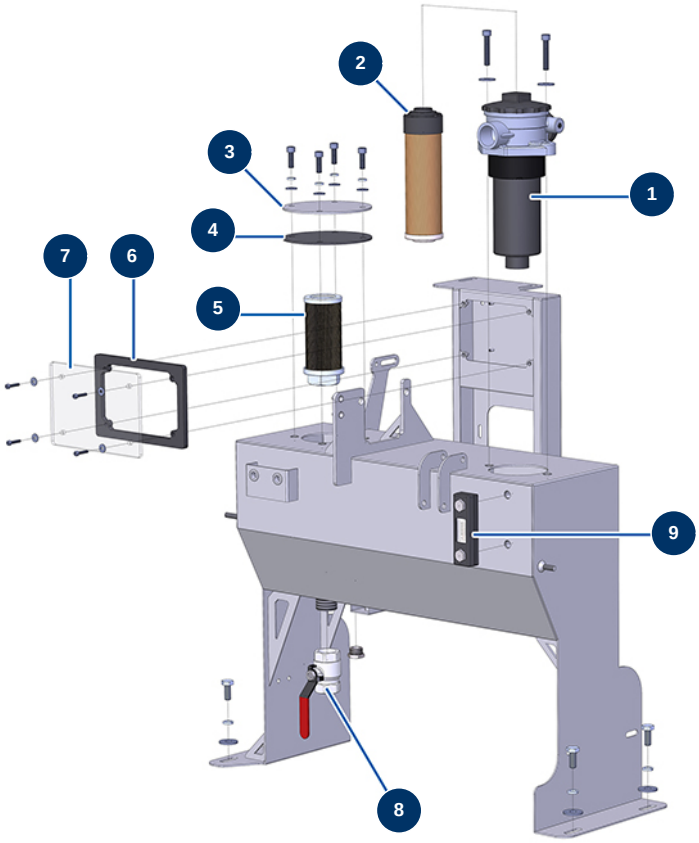

Détails des pièces

Pos.	Référence	Désignation
1	12327	Hydraulic oil return complete filter - JET 750
2	12351	Return filter cartridge - C.P 60
3	C20659	Tank cover
4	12780	Hydraulic tank gasket Ø 140 Thickness 3 mm - C.P 60
5	12328	1" inner threaded suction strainer - JET 750 & C.P 60
6	13018	Safety card box gasket - C.P 60
7	13017	Safety card box holder - C.P 60
8	70031	Drain valve for EUROPRO 4-6-8-14 P, MPE, AG, 7000z, 9000z
9	12326	Visual level of hydraulic tank - CP 60

X-PRO D60 spraying machine - Fuel tank

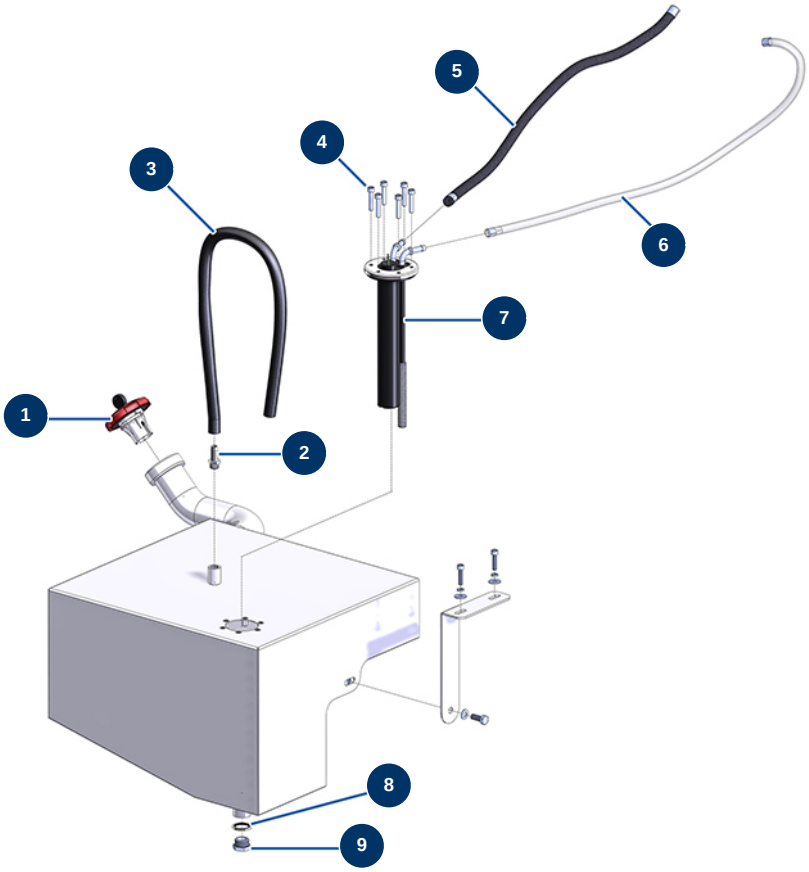

Détails des pièces

Pos.	Référence	Désignation
1	13107	Red diesel tank cap with key - C.P 60
2	80094	1/4" corrugated outer threaded coupling Ø 10
3	50021	Paint hose Ø 10 x 18 by the metre
4	90153	6 x 30 cylindrical head screw
5	12391	Gasoil supply hose Ø 7,5 mm (sold by the metre)
6	12390	Gasoil return hose Ø 6 mm (sold by the metre)
7	12989	Gasoil level gauge - length 250 mm - CP60
8	91032	Steel gasket for hollow screw with 1/2" lip
9	90239	1/2" low-pressure male plug

X-PRO D60 spraying machine - Engine

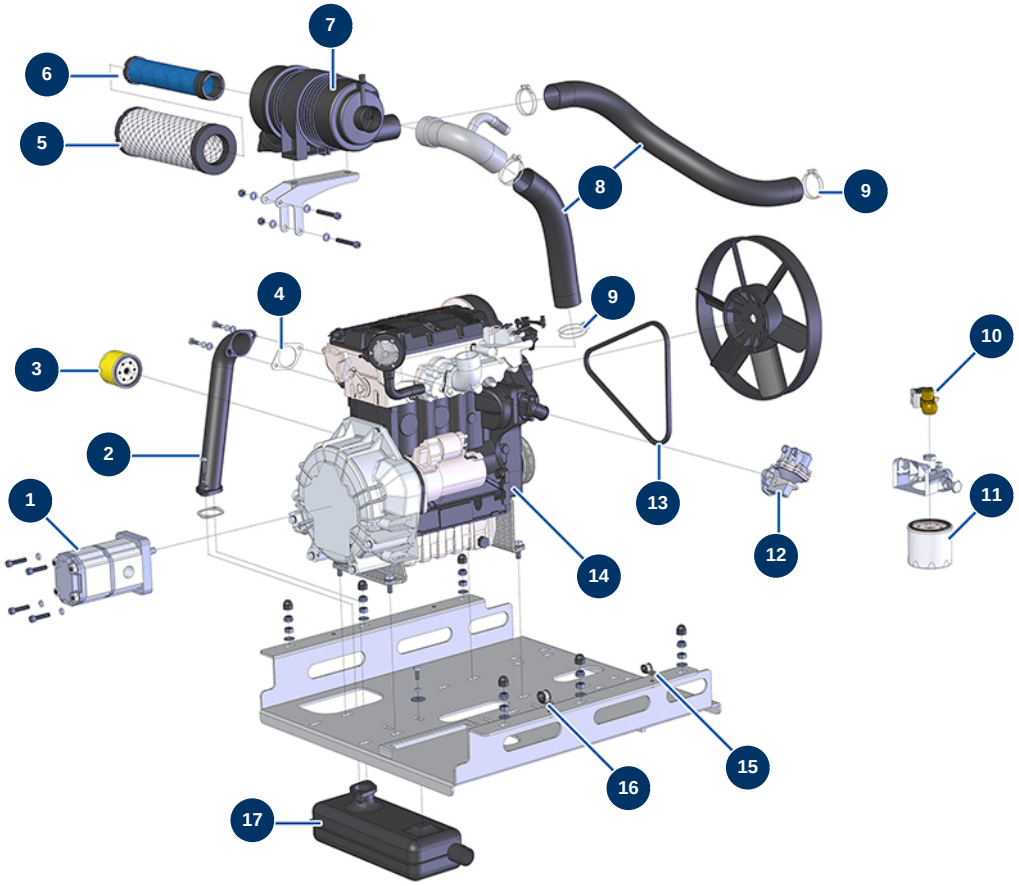

Détails des pièces

Pos.	Référence	Désignation
1	12405	Double hydraulic pump 14 + 8 cc - C.P 60
2	C20362	Exhaust tube 3-cylinder diesel CP60 V17
3	80334	FOCS LDW1003, KDW1003 motor oil filter
4	30793	LOMBARDINI motor exhaust pipe gasket - C.P 60
5	30762	Donaldson filter standard air cartridge for KOHLER KDW 1003 & 1404 motors
6	30763	Donaldson filter safety air cartridge for KOHLER KDW 1003 & 1404 motors
7	30761	Complete Donaldson cyclonic air filter for KOHLER KDW 1003 & 1404 engine
8	12538	PVC GAS sheath Ø 50 by the metre - C.P 60
9	12723	Double wire clamp ø 56 x 65 - CP 60
9	12723	Double wire clamp ø 56 x 65 - CP 60
10	30769	LOMBARDINI 27 hp diesel filter solenoid valve - C.P 60
11	80333	27 hp LOMBARDINI motor diesel filter
12	30748	27 hp LOMBARDINI diesel priming pump - C.P 60

Pos.	Référence	Désignation
13	30714	FOCS LDW 1003 alternator belt - C.P 60
14	91197	Diesel motor KOHLER KDW 1003 gear
15	13951	ø 12 cable collar - CP 60
16	13179	ø 20 cable collar - CP 60
17	30539	CP 60 diesel motor exhaust

X-PRO D60 spraying machine - Radiator (from 12/2021)

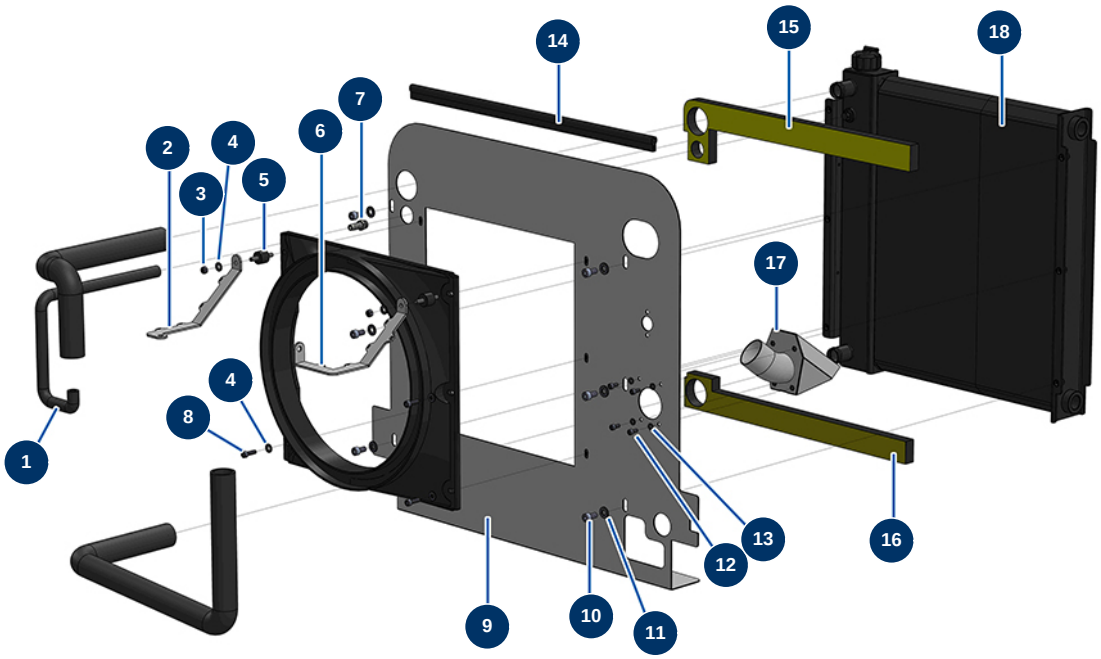

Détails des pièces

Pos.	Référence	Désignation
1	13595	Cooling liquid hose ø 10 x 17 per metre - CP 60
2	C23059	
3	14217	M 6 nylstop inox nut
4	80259	Ø 6 medium washer
4	80259	Ø 6 medium washer
5	30147	Silentbloc ø 20 x 15 M6 for Compact-pro 30
6	C23057	
7	80094	1/4" corrugated outer threaded coupling Ø 10
8	90996	6 x 20 inox cylindrical head screw
9	C23052	
10	90151	8 x 10 cylindrical head screw
11	80260	ø 8 inox medium washer
12	90161	5 x 12 inox cylindrical head screw

Pos.	Référence	Désignation
13	70085	ø 5 narrow washer
14	12301	Profile gasket for sealing by the metre
15	14816	High sealing foam new radiator CP 60 & 80
16	14817	Low sealing foam new radiator CP 60 & 80
17	C23055	
18	14680	Engine/Hydraulic oil cooler RL 2021 - CP 60

X-PRO D60 spraying machine - Radiator (up to 11/2021)

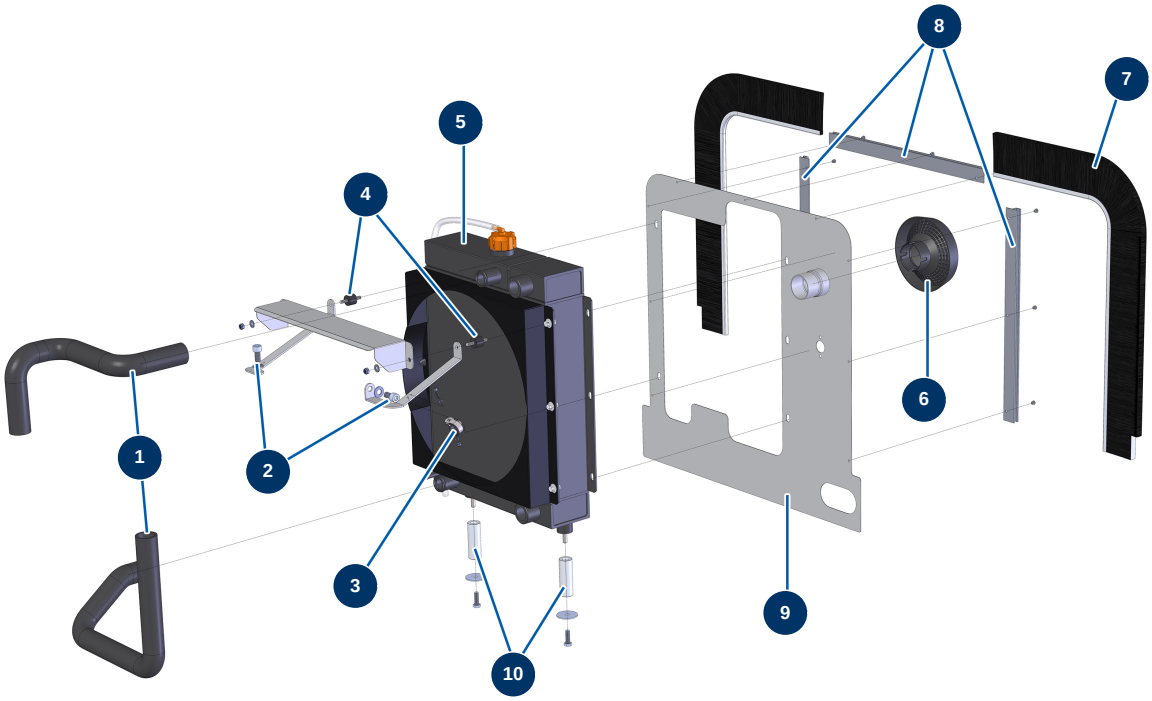

Détails des pièces

Pos.	Référence	Désignation
1	13595	Cooling liquid hose ø 10 x 17 per metre - CP 60
2	80668	10 x 20 cylindrical head screw
3	13179	ø 20 cable collar - CP 60
4	30147	Silentbloc ø 20 x 15 M6 for Compact-pro 30
5	14091	
6	30761	Complete Donaldson cyclonic air filter for KOHLER KDW 1003 & 1404 engine
7	13291	
8	nous consulter	8
9	nous consulter	9
10	nous consulter	10

X-PRO D60 spraying machine - Compressor group

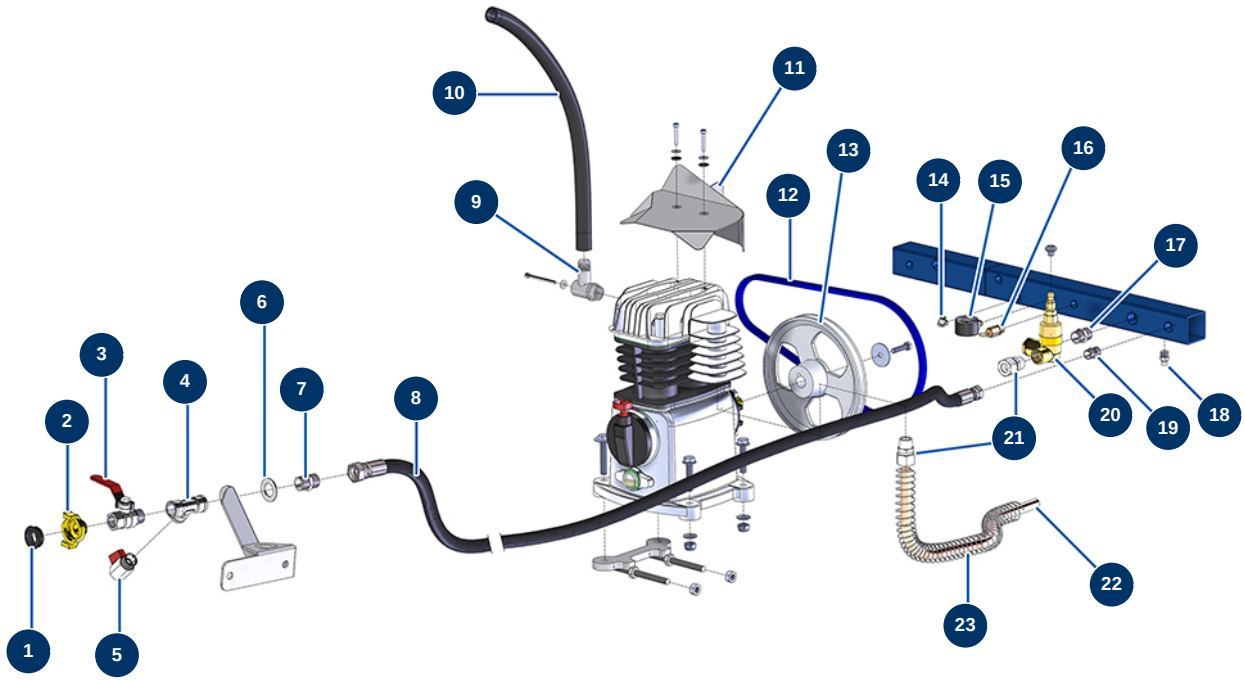

Détails des pièces

Pos.	Référence	Désignation
1	12118	GEKA coupling gasket
2	13572	1/2" outer threaded Geka coupling"
3	90023	Red handle valve M1/2" x F1/2"
4	12105	F1/2" x F1/2" x F1/2" low pressure T
5	30137	1/2" mini lux valve
6	10141	ø 20 inox narrow washer
7	90872	1/2" MaleD x 3/8" MaleD high-pressure nipple
8	14174	Flexible hose 222 - Air line - C.P 60
9	C20569	Compressor air inlet elbow - C.P 60
10	12784	Flexible hose 126 - air supply air filter outlet/compression head - C.P 60
11	C20813	Compressor air baffle - C.P 60
12	12478	Compressor belt - C.P 60
13	12482	EUROPRO C.P 60 head pulley

Pos.	Référence	Désignation
14	30124	Corrugated Legris coupling M1/8" Ø 6
15	80063	Radial manometer 1/8" conical 40 mm 0 to 10 bar
16	80097	1/4" certified outer threaded safety valve 11 bar
17	30369	1/2" MaleC x 1/2" MaleC low-pressure nipple
18	30133	1/4" male compressor tank purge
19	30367	3/8" MaleC x 3/8" MaleC low-pressure nipple
20	80076	1/2" autonomous drain valve
21	13906	M1/2 x 16/14 ogive BP connection
22	C22312	CP60 2017 compressor air outlet copper pipe
23	10688	Spring for E100 steel compressor outlet pipe

X-PRO D60 spraying machine - Battery

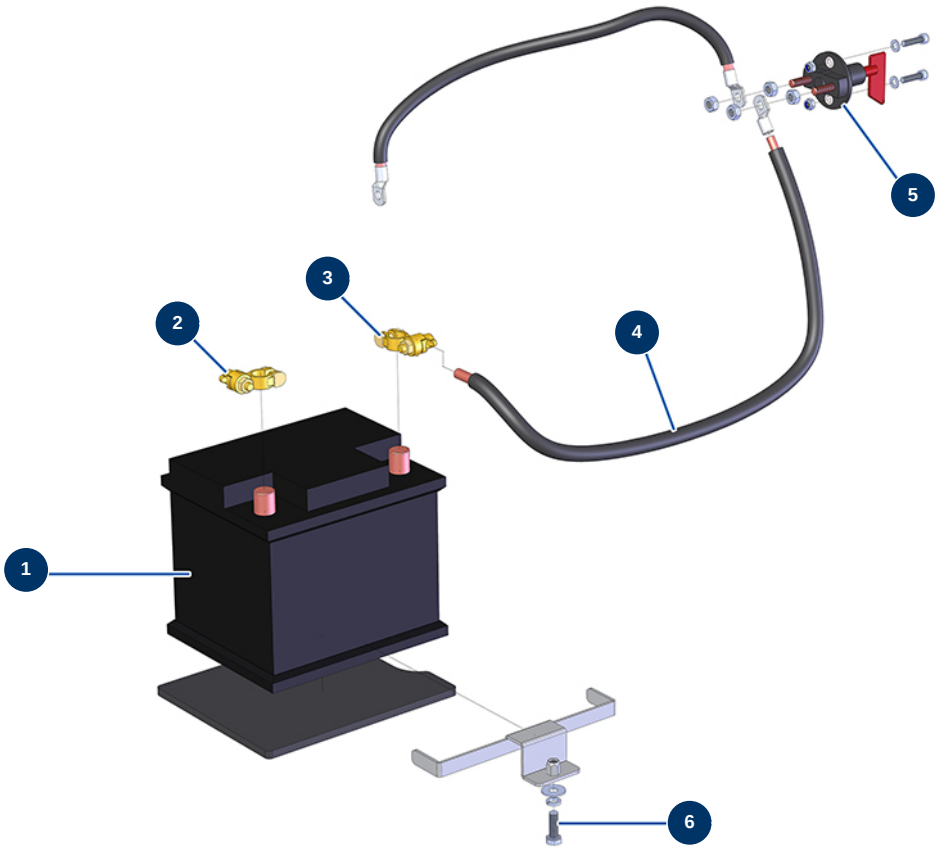

Détails des pièces

Pos.	Référence	Désignation
1	80188	C.P 60 battery
2	80231	Battery brass - lug
3	80230	Battery brass + lug
4	80234	25 mm² battery cable by the metre
5	12394	CP 60 battery circuit breaker
6	11544	THEF 8 x 25 screw

X-PRO D60 spraying machine - Automatic accelerator

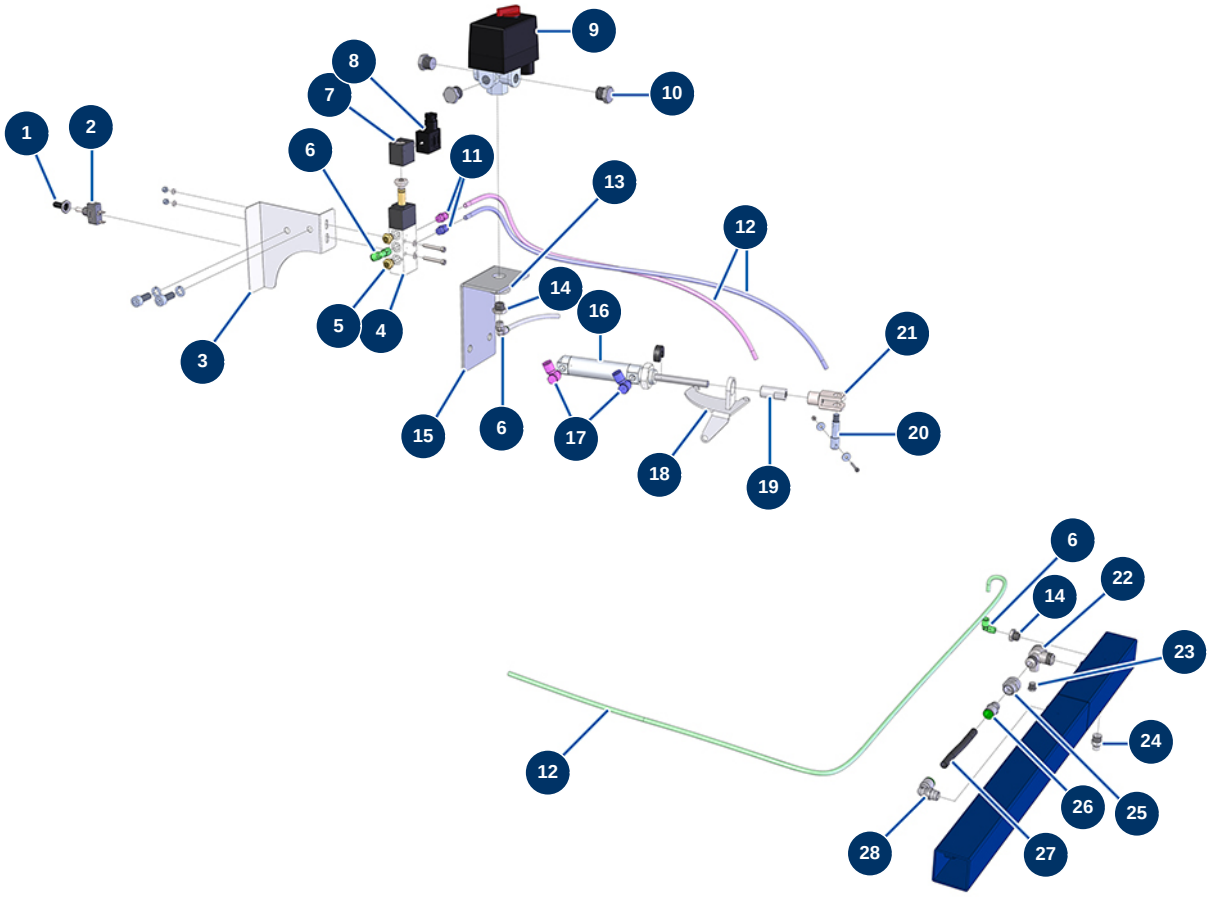

Détails des pièces

Pos.	Référence	Désignation
1	90748	Compressor switch waterproof cap
2	90747	ON/OFF unipolar switch
3	C21386	CP 60 accelerator cover
4	13525	5/2 electro-pneumatic distributor - CP 60
5	12818	Air silencer 1/8" M - CP 60
6	30124	Corrugated Legris coupling M1/8" Ø 6
6	30124	Corrugated Legris coupling M1/8" Ø 6
6	30124	Corrugated Legris coupling M1/8" Ø 6
7	13527	12 VDC coil for electro-pneumatic distributor - CP 60
8	13528	12 VDC coil connector for electro-pneumatic distributor - CP 60
9	30006	Single phase compressor pressure switch
10	30118	1/4" low-pressure male plug
11	91038	Legris straight coupling M1/8 Ø 6

Pos.	Référence	Désignation
12	30403	Calibrated polyurethane tube ø 4 x 6 black by the metre
12	30403	Calibrated polyurethane tube ø 4 x 6 black by the metre
13	30288	ø 16 inox narrow washer
14	90240	1/4" MaleC x 1/8" FemaleD low-pressure reduction
14	90240	1/4" MaleC x 1/8" FemaleD low-pressure reduction
15	C21388	Pressure switch support CP 60
16	12816	Automatic accelerator cylinder - CP 60
17	13529	Banjo flow limiter ø 6 with 1/8" adjustable screw - CP 60
18	C21307	Mounting plate for pneumatic accelerator cylinder 3 cylinders diesel CP 60 V17
19	M10476	Automatic accelerator stop - CP 60
20	M10477	Automatic accelerator finger - CP 60
21	12817	Female clevis for automatic accelerator cylinder - CP 60
22	80098	Anti-return valve M3/8 x M3/8
23	90237	1/8" low-pressure male plug
24	30133	1/4" male compressor tank purge
25	10972	1/4" FemaleD x 3/8" FemaleD low-pressure nipple
26	80688	M1/4 ø 10 push-in connector
27	30405	Calibrated polyurethane tube ø 7,5 x 10 black by the metre
28	30125	Corrugated Legris coupling M1/4" Ø 10"

X-PRO D60 spraying machine - High Pressure Washer

Détails des pièces

Pos.	Référence	Désignation
1	12406	Washer 6 cc single-direction hydraulic motor - CP 60
2	90352	Pump 11 litres 140 bar - C.P 60
3	13101	1/4" thermostatic valve
4	90541	Clear air hose Ø 6 by the metre
5	12605	Flexible hose 88 - HP pump outlet to quick-fit attachment - C.P 60
6	80276	3/8" MaleD x 3/8" MaleC high-pressure nipple
7	10003	ø 16 large washer
8	90336	L M22-150 M x 3/8 F male quick fit attachment
9	90326	M22-150 x 1/4 F female C quick fit attachment
10	90842	1/4" high-pressure MaleC plug

X-PRO D60 spraying machine - High pressure washer lance

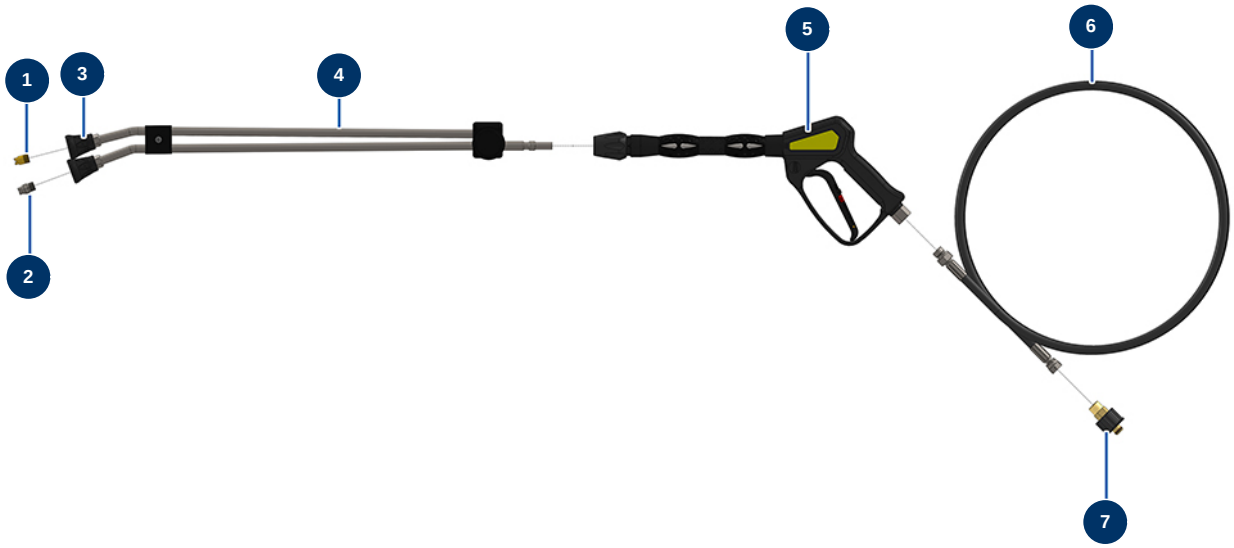

Détails des pièces

Pos.	Référence	Désignation
1	90307	Low pressure nozzle 50°-40
2	90305	High pressure nozzle 15°-45
3	12415	Double elbow lance hose nozzle holder, 600 mm, KW coupler
4	12166	Double elbow lance hose 600 mm, KW coupler
5	12165	Washer spray-gun with protected hose 310 bars, KW coupler
6	12071	Washer hose Ø 8-315 bar 10 metres
7	90328	M22-150 F x 3/8 M female quick fit attachment

X-PRO D60 spraying machine - Water doser

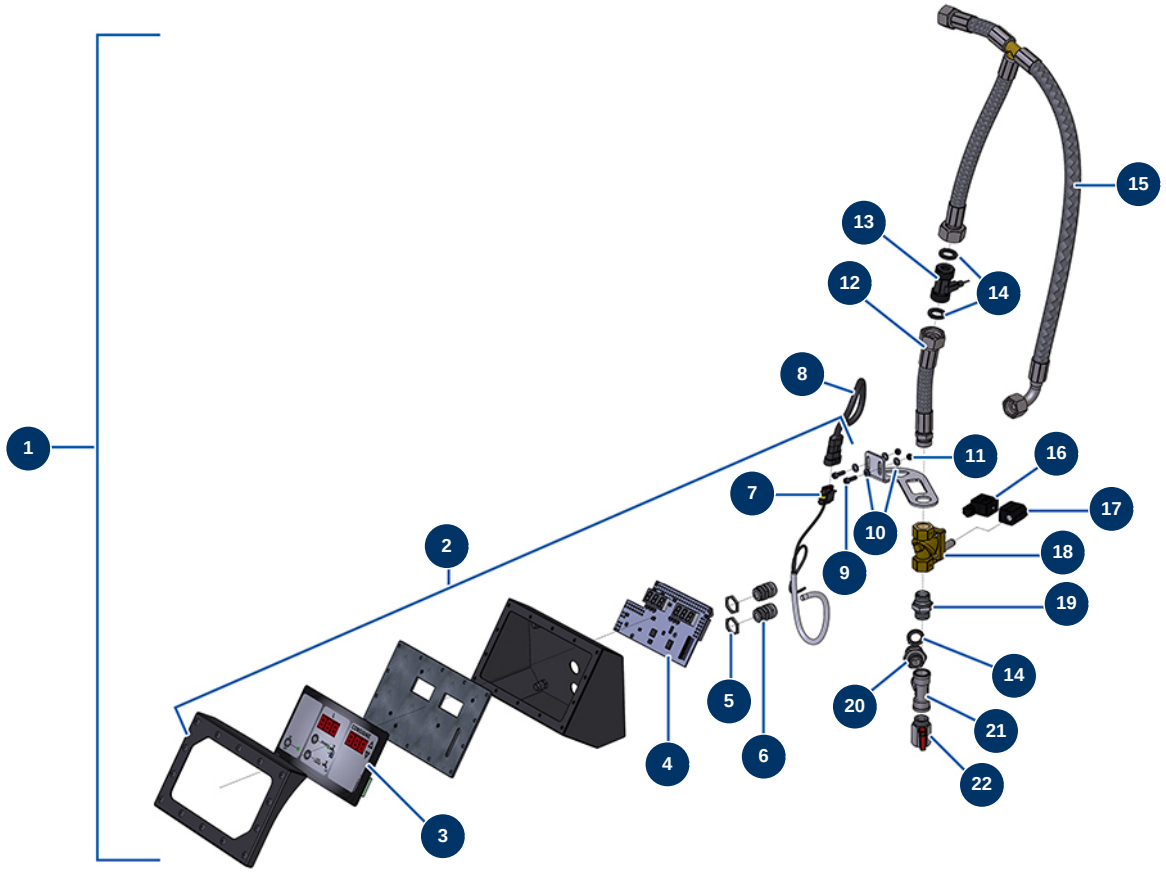

Détails des pièces

Pos.	Référence	Désignation
1	14358	Complete digital water doser - CP 60 & 80
2	14841	Single digital water doser - CP 60 & 80
3	14144	COMPACT PRO 60 & 80 front with membrane
4	14165	12 V & 24 V water dosing electronic card - X-PRO D60, E70, D80
5	30060	11mm cable gland nut
6	30082	Nickel plated watertight cable gland of 11
7	13434	3-way connector male spade
8	13433	3-way connector - female lug
9	12863	5 x 20 inox cylindrical head screw
10	11737	ø 5 inox medium washer
11	11880	M 5 nylstop nut
12	14201	Flexible hose 224 - Sensor output - C.P 60 & 80
13	11623	C.P Ideal Mixer flow transmitter sensor

Pos.	Référence	Désignation
14	11618	3/4" red fiber flat gasket
14	11618	3/4" red fiber flat gasket
15	14200	Flexible hose 223 - Digital water meter/pump H.P - C.P 60 & 80
16	13528	12 VDC coil connector for electro-pneumatic distributor - CP 60
17	14199	Water meter solenoid valve 12V DC coil - CP 60 & 80
18	14198	Water meter solenoid valve 1/2"NF - CP 60 & 80
19	90627	1/2" MaleD x 1/2" MaleD high-pressure nipple
20	11891	1/2" MaleD x 3/4" MaleD low-pressure nipple
21	12105	F1/2" x F1/2" x F1/2" low pressure T
22	30137	1/2" mini lux valve

X-PRO D60 spraying machine - Hydraulic (supply)

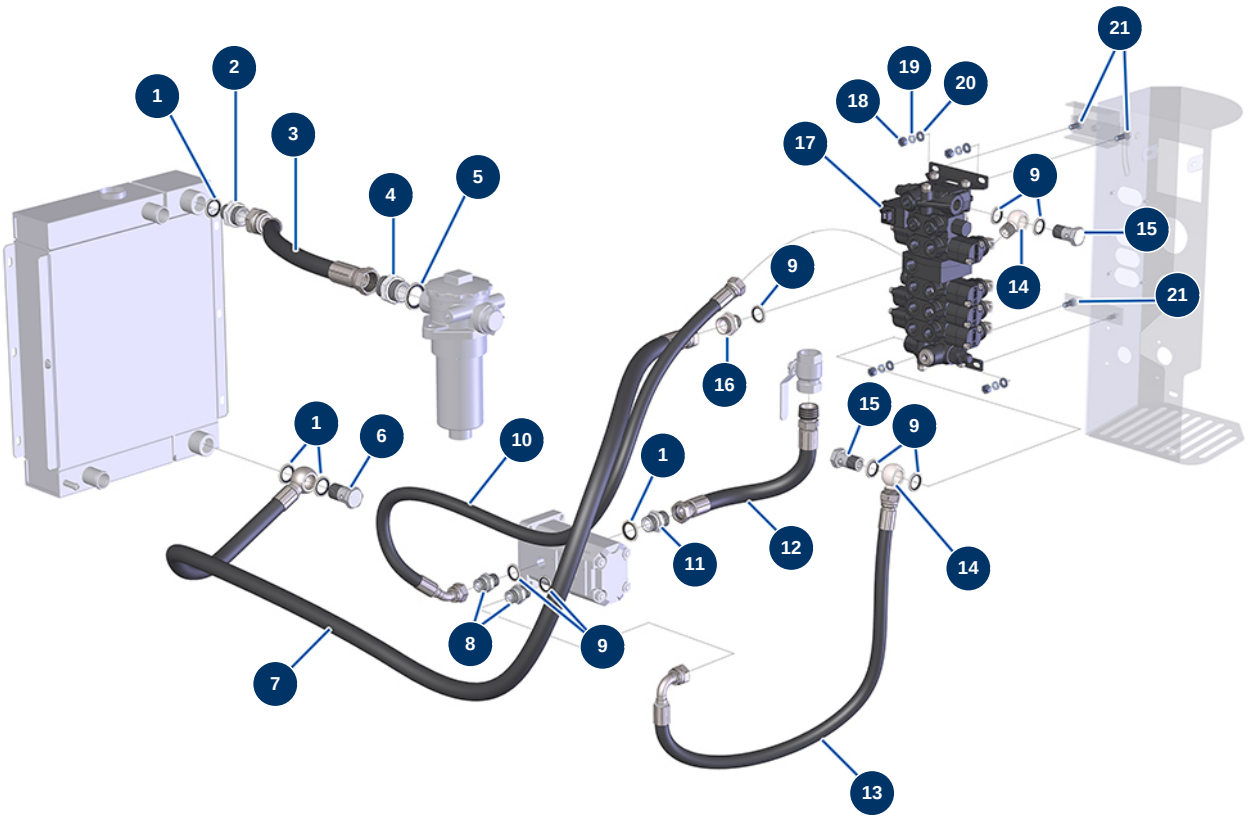

Détails des pièces

Pos.	Référence	Désignation
1	12573	Steel gasket for 3/4" hollow screw with lip
1	12573	Steel gasket for 3/4" hollow screw with lip
1	12573	Steel gasket for 3/4" hollow screw with lip
2	12569	3/4" MaleD x 1" MaleD high-pressure nipple
3	14523A	Flexible hose 240 - BONDIOLI radiator return/hydraulic tank - C.P 60 2018
4	12568	1" MaleD x 1" MaleD high-pressure nipple
5	12572	Steel gasket for 1" hollow screw with lip
6	13307	3/4 HP drilled head screw
7	13305A	Flexible hose 220 - distributor/oil cooler - CP 60
8	90627	1/2" MaleD x 1/2" MaleD high-pressure nipple
9	91032	Steel gasket for hollow screw with 1/2" lip
9	91032	Steel gasket for hollow screw with 1/2" lip
9	91032	Steel gasket for hollow screw with 1/2" lip

Pos.	Référence	Désignation
9	91032	Steel gasket for hollow screw with 1/2" lip
10	13075	Flexible hose 215 - hopper circuit supply - CP 60
11	90774	3/4" MaleD x 3/4" MaleD high-pressure nipple
12	13071A	Flexible hose 211 - hydraulic tank supply - CP 60
13	13074	Flexible hose 214 - mixer circuit supply - CP 60
14	12571	1/2" banjo threaded 1/2"
14	12571	1/2" banjo threaded 1/2"
15	13285	1/2 drilled head screw ø 21
15	13285	1/2 drilled head screw ø 21
16	12733	1/2" MaleD x 3/4" MaleD high-pressure nipple
17	12332	5-way distributor with LP and integrated hopper Bypass - C.P 60
18	90440	M 8 zinc plated nut
19	80269	Grower washer ø 8
20	30256	ø 8 inox narrow washer
21	30273	THEF 8 x 20 screw
21	30273	THEF 8 x 20 screw

X-PRO D60 spraying machine - Hydraulic (control)

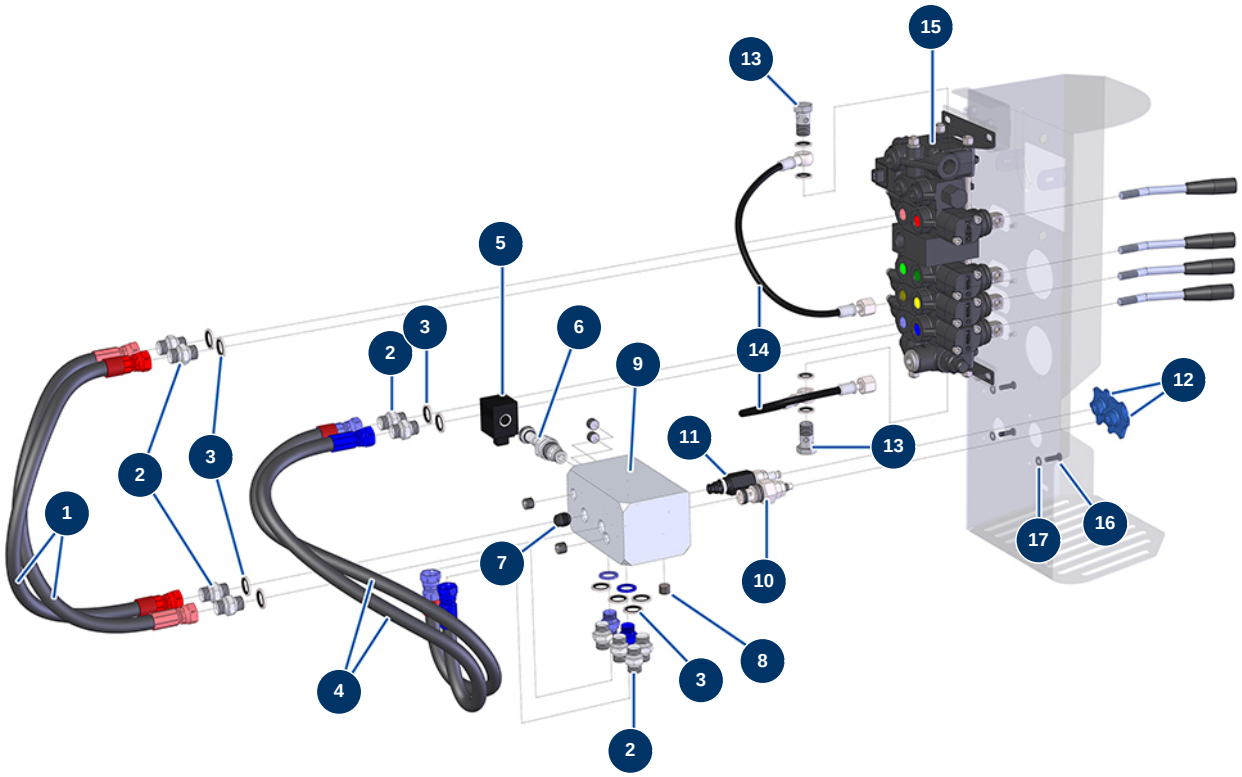

Détails des pièces

Pos.	Référence	Désignation
1	13060A	Flexible hose 201 - copper control - CP 60
2	90698	3/8" MaleD x 3/8" MaleD high-pressure nipple
2	90698	3/8" MaleD x 3/8" MaleD high-pressure nipple
2	90698	3/8" MaleD x 3/8" MaleD high-pressure nipple
3	91031	Steel gasket for hollow screw with 3/8 lip
3	91031	Steel gasket for hollow screw with 3/8 lip
3	91031	Steel gasket for hollow screw with 3/8 lip
4	13063A	Flexible hose 204 - mixer control - CP 60
5	13316	12V coil by-pass valve in cartridge - C.P 60
6	12912	12V bypass valve - CP 60
7	12577	3/8 cartridge check valve - CP 60
8	12576	1/4" MaleC Male high-pressure headless plug
9	M10404	Speed regulator hydraulic block - CP 60

Pos.	Référence	Désignation
10	13016	Mixer cartridge 45L/min single flow limiter - C.P 60
11	13143	Hopper cartridge 20L/min equalised flow limiter - C.P 60
12	M10421	Flow limiter cartridge handle - C.P 60
13	91033	3/8 drilled head screw
13	91033	3/8 drilled head screw
14	13027	Manometer hose 400 mm 1/4"F (mano) x 1 banjo Ø 14 mm - C.P 60
15	12332	5-way distributor with LP and integrated hopper Bypass - C.P 60
16	11145	6 x 16 inox cylindrical pan head screw
17	30291	ø 6 large washer

X-PRO D60 spraying machine - Hydraulic (actuators)

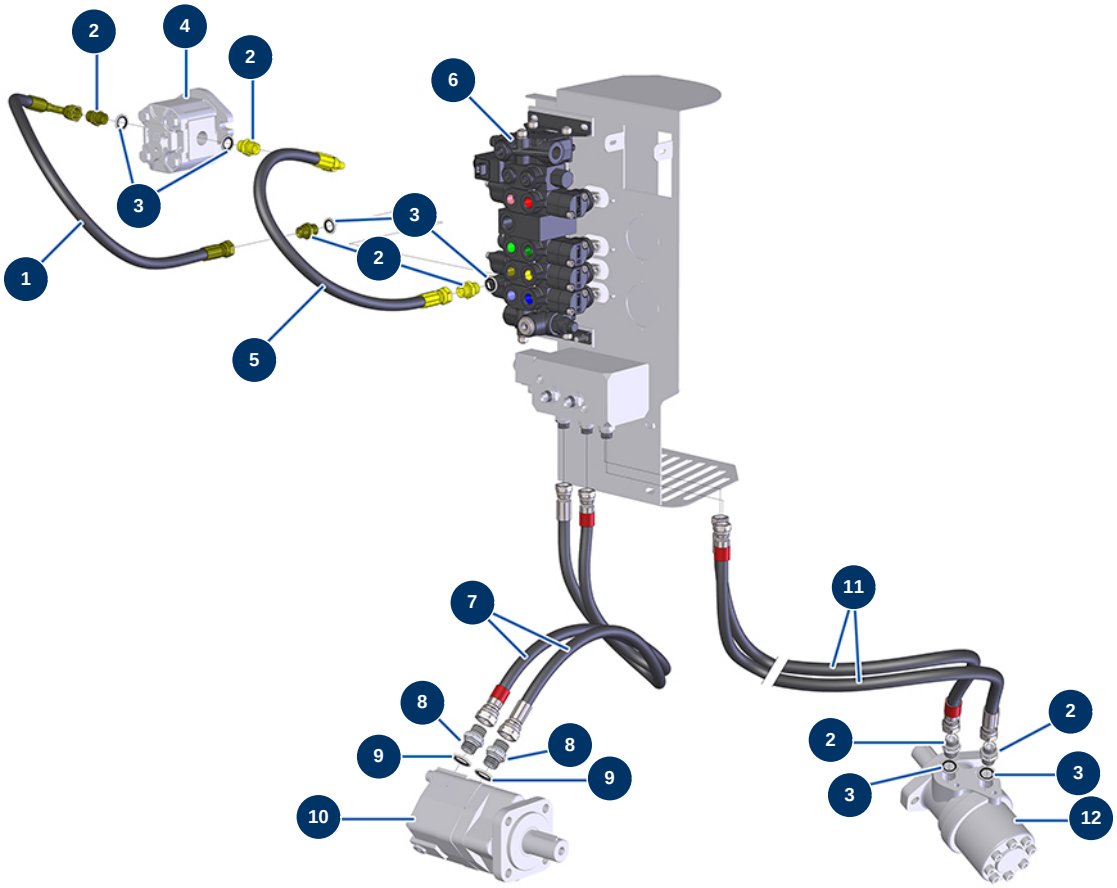

Détails des pièces

Pos.	Référence	Désignation
1	13062	Flexible hose 203 - cleaner - CP 60
2	90698	3/8" MaleD x 3/8" MaleD high-pressure nipple
2	90698	3/8" MaleD x 3/8" MaleD high-pressure nipple
2	90698	3/8" MaleD x 3/8" MaleD high-pressure nipple
2	90698	3/8" MaleD x 3/8" MaleD high-pressure nipple
2	90698	3/8" MaleD x 3/8" MaleD high-pressure nipple
3	91031	Steel gasket for hollow screw with 3/8 lip
3	91031	Steel gasket for hollow screw with 3/8 lip
3	91031	Steel gasket for hollow screw with 3/8 lip
3	91031	Steel gasket for hollow screw with 3/8 lip
4	12406	Washer 6 cc single-direction hydraulic motor - CP 60
5	13061	Flexible hose 202 - cleaner - CP 60
6	12332	5-way distributor with LP and integrated hopper Bypass - C.P 60

Pos.	Référence	Désignation
7	13242A	Flexible hose 217 - hopper outlet - CP 60
8	90627	1/2" MaleD x 1/2" MaleD high-pressure nipple
8	90627	1/2" MaleD x 1/2" MaleD high-pressure nipple
9	91032	Steel gasket for hollow screw with 1/2" lip
9	91032	Steel gasket for hollow screw with 1/2" lip
10	13546	Hydraulic motor BMS 160 hopper - CP 60
11	13243A	Flexible hose 218 - mixer outlet - CP 60
12	12403	Hydraulic motor BMR 250 mixer - CP 60

X-PRO D60 spraying machine - Hydraulic (regulation)

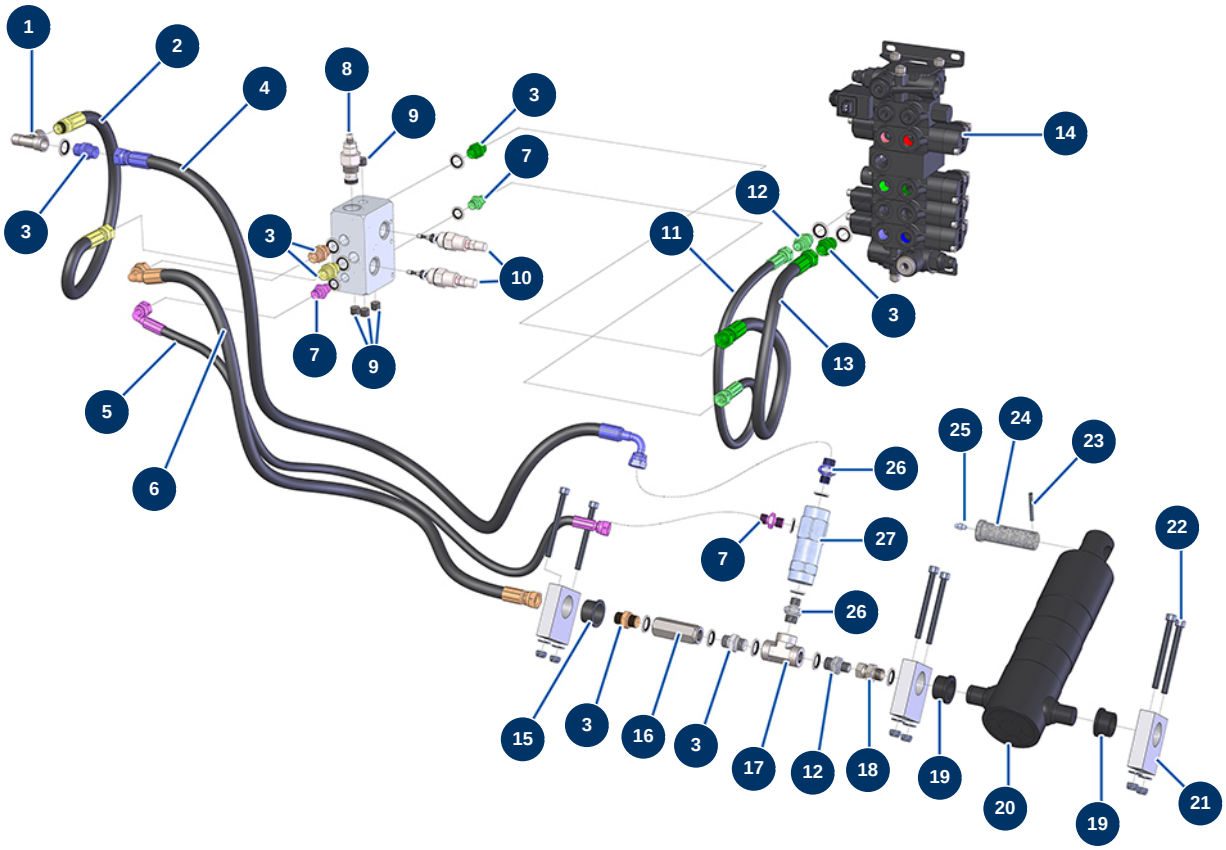

Détails des pièces

Pos.	Référence	Désignation
1	12530	M3/8" x F3/8" x F3/8" low pressure T
2	13059	Flexible hose 200 - cylinder block return/hydraulic tank - CP 60
3	90698	3/8" MaleD x 3/8" MaleD high-pressure nipple
3	90698	3/8" MaleD x 3/8" MaleD high-pressure nipple
3	90698	3/8" MaleD x 3/8" MaleD high-pressure nipple
3	90698	3/8" MaleD x 3/8" MaleD high-pressure nipple
3	90698	3/8" MaleD x 3/8" MaleD high-pressure nipple
3	90698	3/8" MaleD x 3/8" MaleD high-pressure nipple
4	14288	Flexible hose 227 - Lowering cylinder supply - P.C. 60
5	13065A	Flexible hose 206 - valve control - CP 60
6	12606	Flexible hose 42 - cylinder supply - C.P 60
7	90703	1/4" MaleD x 1/4" MaleD high-pressure nipple
7	90703	1/4" MaleD x 1/4" MaleD high-pressure nipple

Pos.	Référence	Désignation
7	90703	1/4" MaleD x 1/4" MaleD high-pressure nipple
8	13016	Mixer cartridge 45L/min single flow limiter - C.P 60
9	12576	1/4" MaleC Male high-pressure headless plug
9	12576	1/4" MaleC Male high-pressure headless plug
10	13020	Cylinder pressure limiter - CP 60
11	13064	Flexible hose 205 - cylinder control - CP 60
12	90704	1/4" MaleD x 3/8" MaleD high-pressure nipple
12	90704	1/4" MaleD x 3/8" MaleD high-pressure nipple
13	13067A	Flexible hose 216 - control distributor/cylinder block - C.P 60
14	12332	5-way distributor with LP and integrated hopper Bypass - C.P 60
15	14423	Bearing with flange 28/32 x 20 - CP 60 & 80
16	14268	HP 2 x 3/8"F non-return valve
17	80438	3/8" FemaleC x 3/8" FemaleC x 3/8" FemaleC high-pressure T
18	14287	16/150 MaleD x 3/8" FemaleC - CP 60 high-pressure nipple
19	14129	Bearing with flange 25/32 x 20 - CP 60 & 80
19	14129	Bearing with flange 25/32 x 20 - CP 60 & 80
20	12307	Mixer telescopic cylinder - C.P 60
21	M20015	Hopper cylinder support CP 60 & 80
22	14152	8 x 90 cylindrical head screw
23	12474	Cylinder axis elastic pin - CP 60
24	M10251	Cylinder axle - CP 60
25	60012	M6 straight lubricator
26	1057100	3/8" MaleC x 1/4" MaleD high-pressure nipple
26	1057100	3/8" MaleC x 1/4" MaleD high-pressure nipple
27	14599	Cylinder operated non-return valve - CP 60

X-PRO D60 spraying machine - Mortar hopper tank

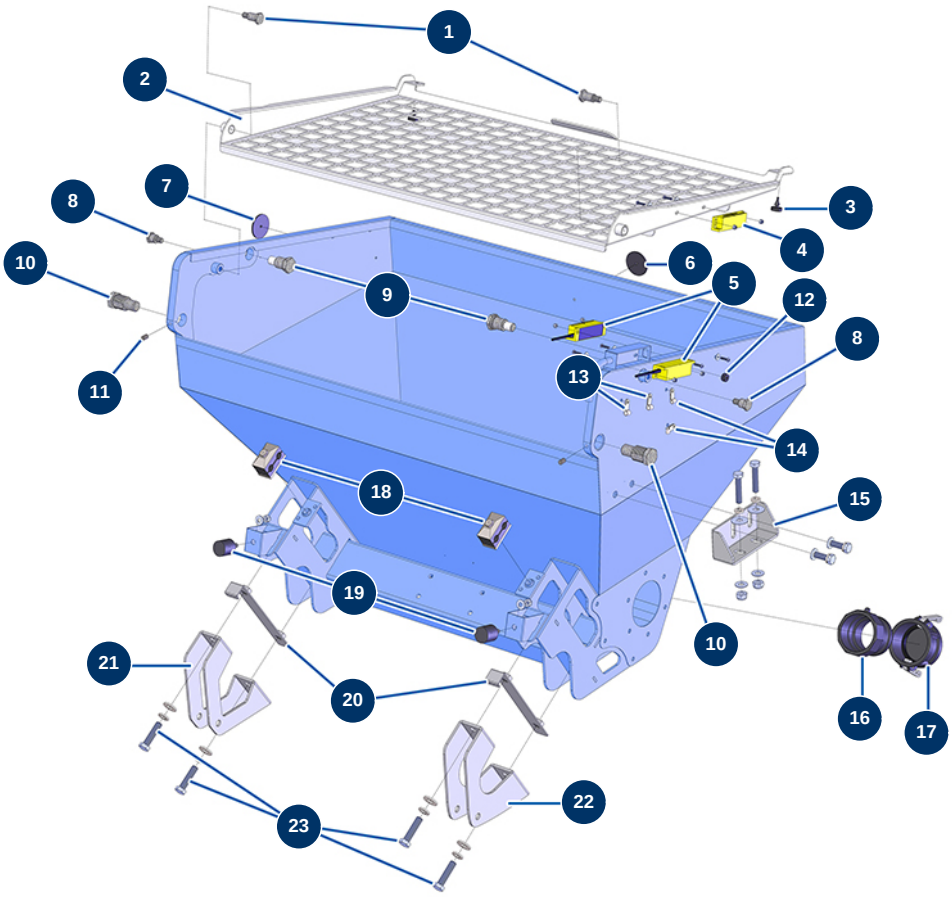

Détails des pièces

Pos.	Référence	Désignation
1	M20016	Pivot pin for CP 60 & 80 mortar hopper grid
2	C22140	Mortar hopper grid CP 60 & 80
3	12385	Mobile hood foam rubber stop - C.P 60
4	12980	Hopper and mixer safety grid sensor - C.P 60
5	12120	Grid safety sensor for JETMIX, MIXPRO 14, 70 & 100
6	12361	Round & orange reflector - C.P 60
7	12362	Round & white reflector - C.P 60
8	M20012	Anti-dust grid locking pin CP 60 & 80
8	M20012	Anti-dust grid locking pin CP 60 & 80
9	M20013	Pivot pin for CP 60 & 80 anti-dust grid
10	M20014	Mixer pivot finger - CP 60 & 80
10	M20014	Mixer pivot finger - CP 60 & 80
11	14151	8 x 12 stainless steel socket head screw with flat tip

Pos.	Référence	Désignation
12	13399	Ø6 rubber grommet
13	90266	Cable support Ø 7.9
14	90676	Cable support Ø 6.4
15	C22024	CP 60 2017 hopper support gusset
16	13172	Polypro 3" threaded adapter - C.P 60
17	13171	Polypro 3" female cam plug - C.P 60
18	12438	Double tube collar ø 22
19	90769	Ø 30 x 30 M8 stop
20	C22109	Hopper mounting strip CP 60, 80 & 120
21	C22043	CP 60, 80 & 120 hopper front clamping flange
22	C22045	CP 60, 80 & 120 hopper rear clamping flange
23	12467	THEF 12 x 50 screw

X-PRO D60 spraying machine - Transmission (up to 03/2023)

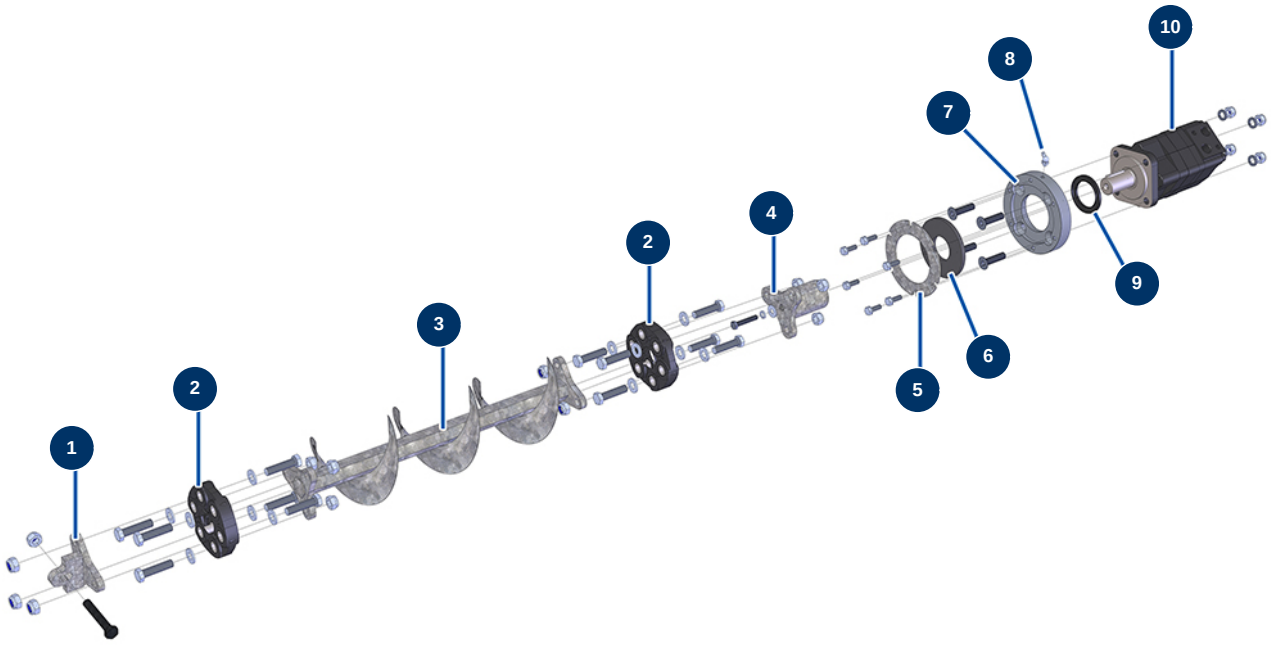

Détails des pièces

Pos.	Référence	Désignation
1	C20663	Worm gear stator link coupling - CP 60
2	12484	Transmission shaft elastic coupling - C.P 60
2	12484	Transmission shaft elastic coupling - C.P 60
3	C20508	X-PRO D60 2017 tank bottom drive shaft
4	C20701	Motor/hopper coupling - C.P 60
5	C20389	Reinforcement washer - CP60
6	12511	Tank base gasket - C.P 60
7	M10332	H25 hopper motor bearing - C.P 60
8	12397	45° x M6 greaser - C.P 60
9	12825	Spi seal 50 x 72 x 6 - C.P 60
10	13546	Hydraulic motor BMS 160 hopper - CP 60

X-PRO D60 spraying machine - Transmission (from 04/2023)

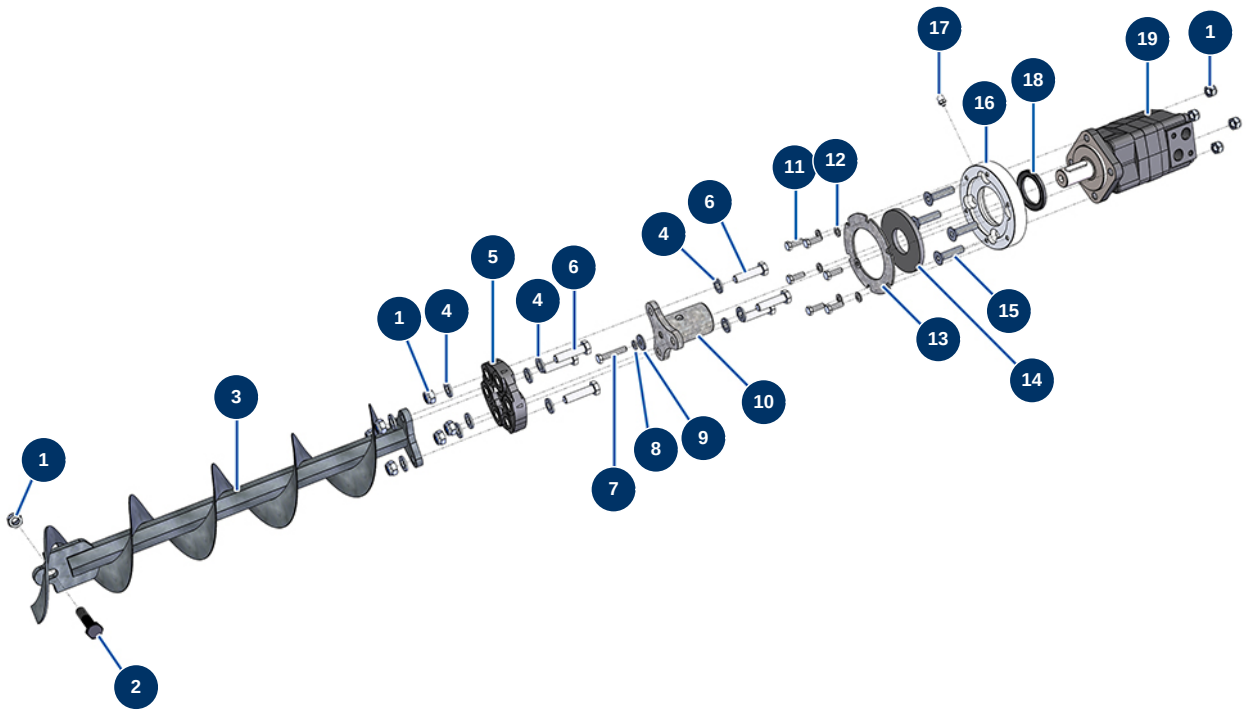

Détails des pièces

Pos.	Référence	Désignation
1	10051	M 12 nylstop nut
1	10051	M 12 nylstop nut
1	10051	M 12 nylstop nut
2	12520	12 x 70 THPF screw, black 10.9
3	C23387	
4	30281	ø 12 inox narrow washer
4	30281	ø 12 inox narrow washer
4	30281	ø 12 inox narrow washer
5	12484	Transmission shaft elastic coupling - C.P 60
6	12467	THEF 12 x 50 screw
6	12467	THEF 12 x 50 screw
7	11798	THEF 8 x 45 screw
8	80269	Grower washer ø 8

Pos.	Référence	Désignation
9	30292	ø 8 inox large washer
10	C20701	Motor/hopper coupling - C.P 60
11	11544	THEF 8 x 25 screw
12	30256	ø 8 inox narrow washer
13	C20389	Reinforcement washer - CP60
14	12511	Tank base gasket - C.P 60
15	12805	12 x 50 countersunk head screw
16	M10332	H25 hopper motor bearing - C.P 60
17	12397	45° x M6 greaser - C.P 60
18	12825	Spi seal 50 x 72 x 6 - C.P 60
19	13546	Hydraulic motor BMS 160 hopper - CP 60

X-PRO D60 spraying machine - Pump (facade)

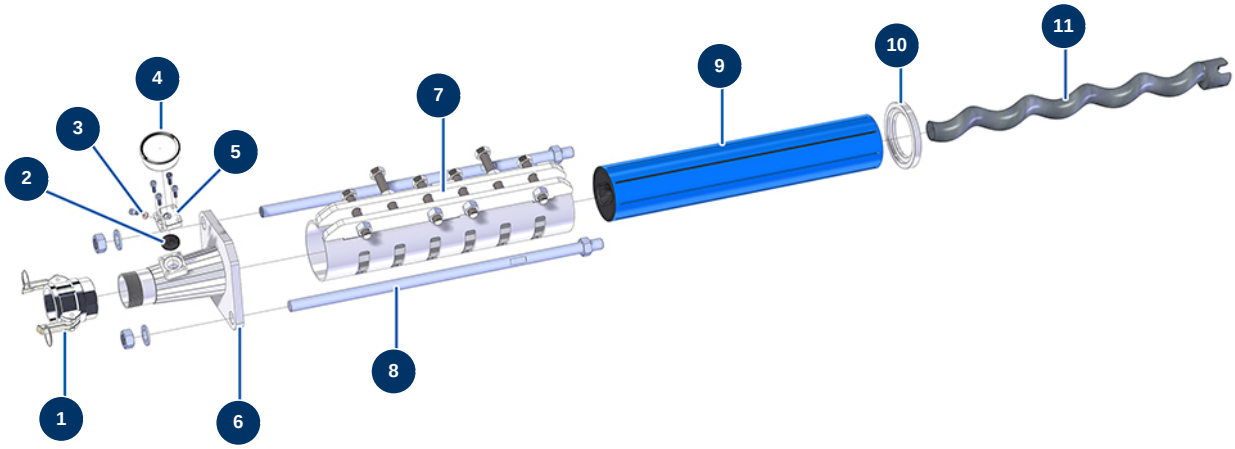

Détails des pièces

Pos.	Référence	Désignation
1	12364	2" camlock steel coupling, inner threaded 2" - CP 60
2	12126	MIXPRO 14 pump head manometer membrane
3	12765	Copper seal for JETPRO 80 pump nose
4	80070	Axial manometer 1/4" conical oil 50 mm 0 to 60 bar
5	M10079	MIXPRO 14 cage cover
6	C20500	Pump head clamp for 2L6 stator - C.P 60
7	C20766	MAP10 clamping jacket - CP60 V17
8	M10281	595 mm fastening tie rod for CP 60
9	MI3F00503800	EUROPRO JUMBO SX 8 slits pump stator
10	M10361	CP60 stator centring ring
11	MI7009008800	EUROPRO JUMBO pump rotor

X-PRO D60 spraying machine - Pump (E.W.I.)

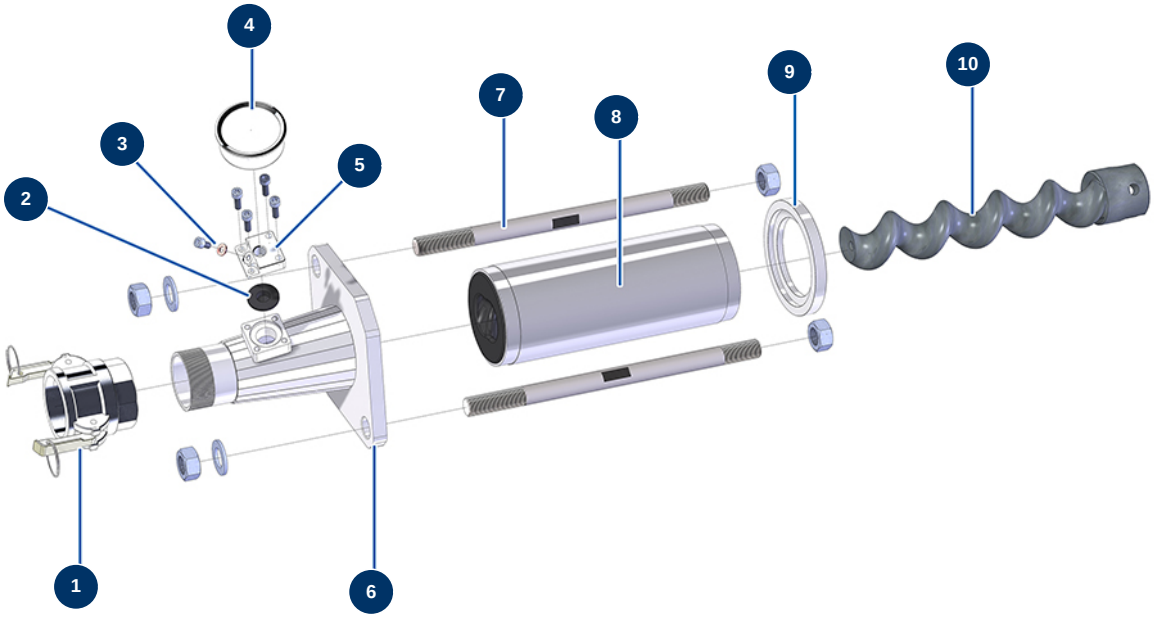

Détails des pièces

Pos.	Référence	Désignation
1	12364	2" camlock steel coupling, inner threaded 2" - CP 60
2	12126	MIXPRO 14 pump head manometer membrane
3	12765	Copper seal for JETPRO 80 pump nose
4	80070	Axial manometer 1/4" conical oil 50 mm 0 to 60 bar
5	M10079	MIXPRO 14 cage cover
6	C20500	Pump head clamp for 2L6 stator - C.P 60
7	M10354	330 mm fastening tie rod for CP 60
8	MI3F00522201	EUROPRO MAP 8 SX pump stator
9	M10361	CP60 stator centring ring
10	MI7009043700	EUROPRO MAP 8 pump rotor

X-PRO D60 spraying machine - Mixer

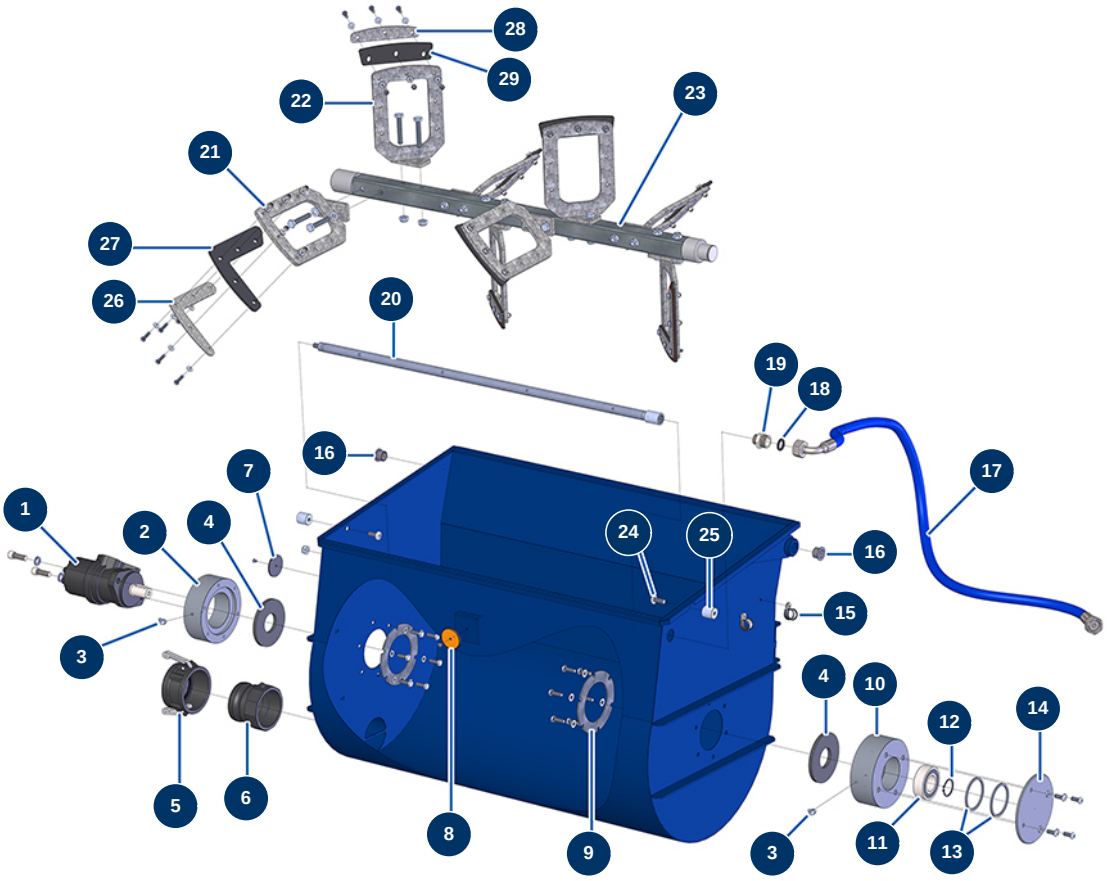

Détails des pièces

Pos.	Référence	Désignation
1	12403	Hydraulic motor BMR 250 mixer - CP 60
2	M10244	Mixer motor bearing housing - CP60
3	12397	45° x M6 greaser - C.P 60
3	12397	45° x M6 greaser - C.P 60
4	12511	Tank base gasket - C.P 60
4	12511	Tank base gasket - C.P 60
5	13171	Polypro 3" female cam plug - C.P 60
6	13172	Polypro 3" threaded adapter - C.P 60
7	12362	Round & white reflector - C.P 60
8	12361	Round & orange reflector - C.P 60
9	C20389	Reinforcement washer - CP60
10	M10243	Mixer bearing - CP 60
11	12479	Self-aligning ball bearing Ø 35 x 72 x 23 - C.P 60

Pos.	Référence	Désignation
12	12481	Ø 35 outer circlip - CP 60
13	M10293	Mixer hopper bearing wedging ring - C.P 60
14	C20510	CP60 V17 bearing block cover
15	13179	ø 20 cable collar - CP 60
16	12418	Bearing with flange 20/23 x 16 - C.P 60
16	12418	Bearing with flange 20/23 x 16 - C.P 60
17	13625	Flexible hose 221 - mixer hopper water supply - C.P 60 from 11/2015
18	11618	3/4" red fiber flat gasket
19	11891	1/2" MaleD x 3/4" MaleD low-pressure nipple
20	C20605	Mixer water distribution ramp - C.P 60
21	C20422	Mixing right paddle - C.P 60
22	C20421	Mixing left paddle - C.P 60
23	C20568	CP 60 V17 tank bottom driveshaft
24	14169	10 x 25 inox cylindrical pan head screw
25	M20005	Slide pin for mixer tank CP 60, 70 & 80
26	C22153	CP 60 2017 blade end flap tightening plate
27	14127	CP 60 & 80 mixer end blade flap
28	C22152	CP 60 2017 blade flap tightening plate
29	14128	CP 60 & 80 mixer blade flap

X-PRO D60 spraying machine - Anti-dust mixer grid

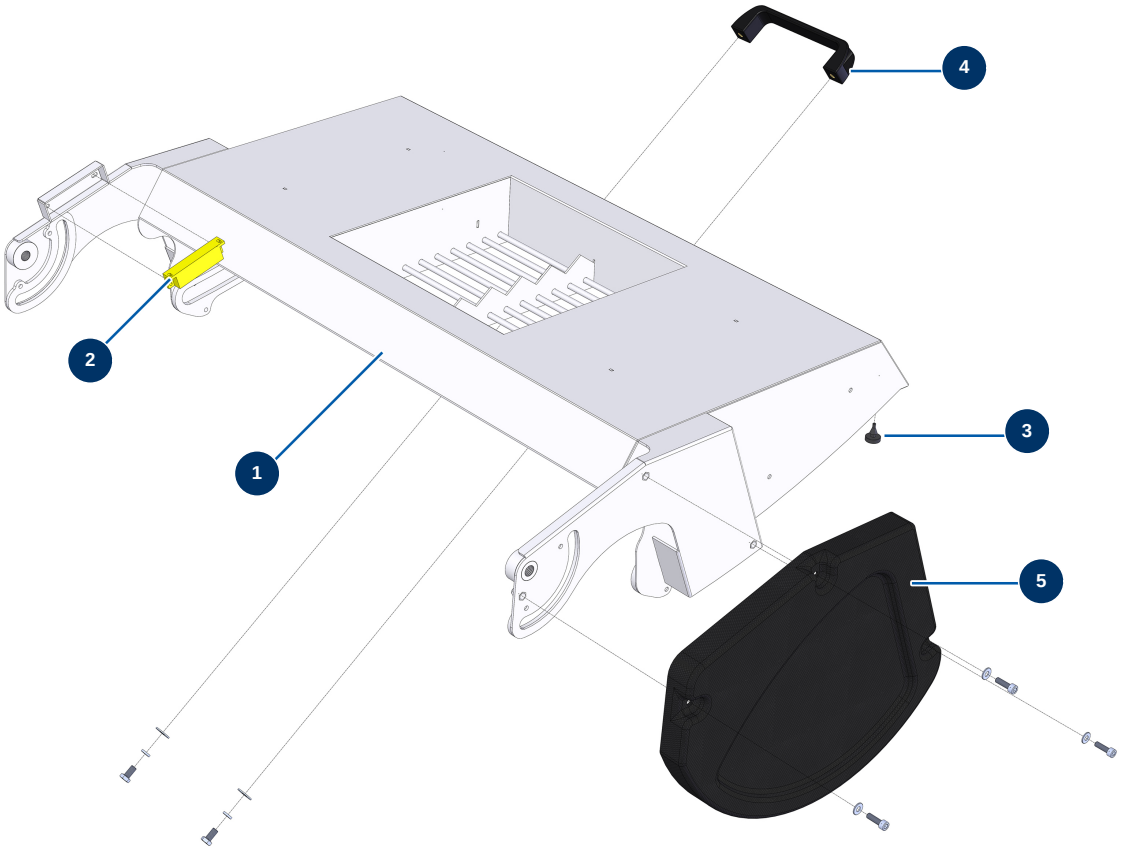

Détails des pièces

Pos.	Référence	Désignation
1	14363	Anti-dust mixer grid - CP 60 & 80
2	12980	Hopper and mixer safety grid sensor - C.P 60
3	12385	Mobile hood foam rubber stop - C.P 60
4	1042523	CP 60 grid handle
5	14221	

X-PRO D60 spraying machine - Openwork mixer grid

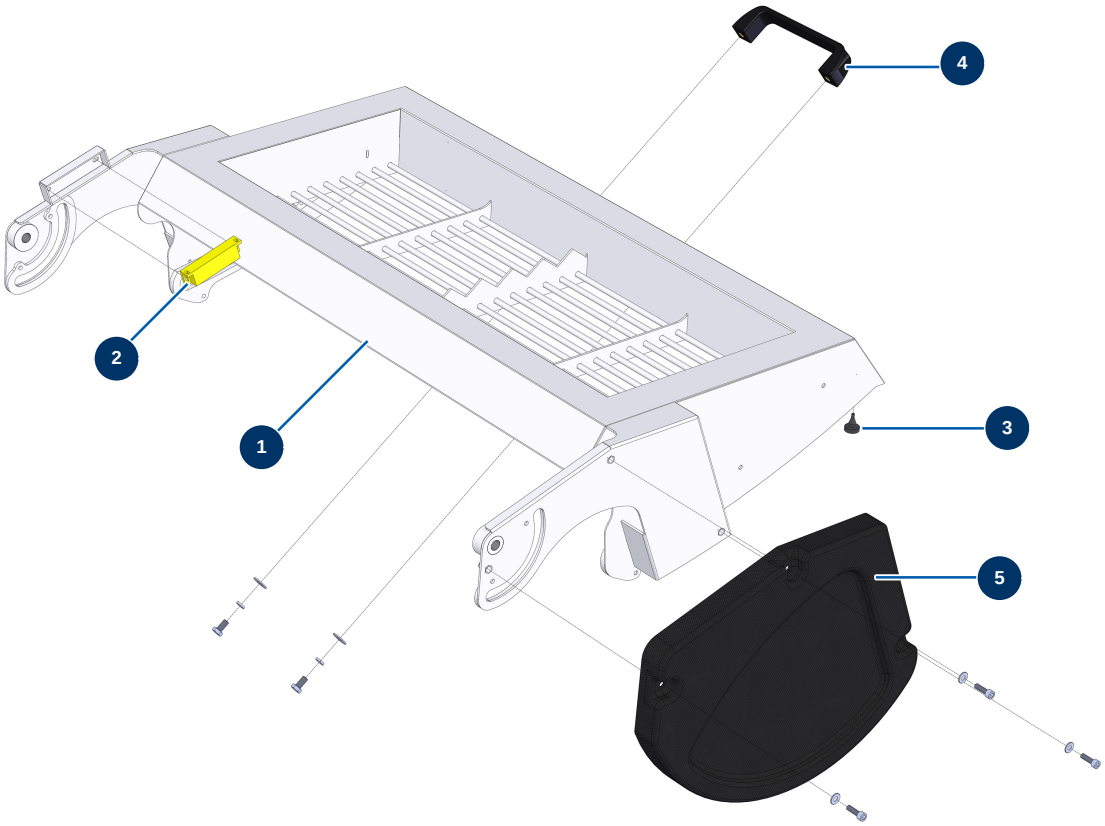

Détails des pièces

Pos.	Référence	Désignation
1	14364	Openwork mixer grid - CP 60 & 80
2	12980	Hopper and mixer safety grid sensor - C.P 60
3	12385	Mobile hood foam rubber stop - C.P 60
4	1042523	CP 60 grid handle
5	14221	

X-PRO D60 spraying machine - Control panel

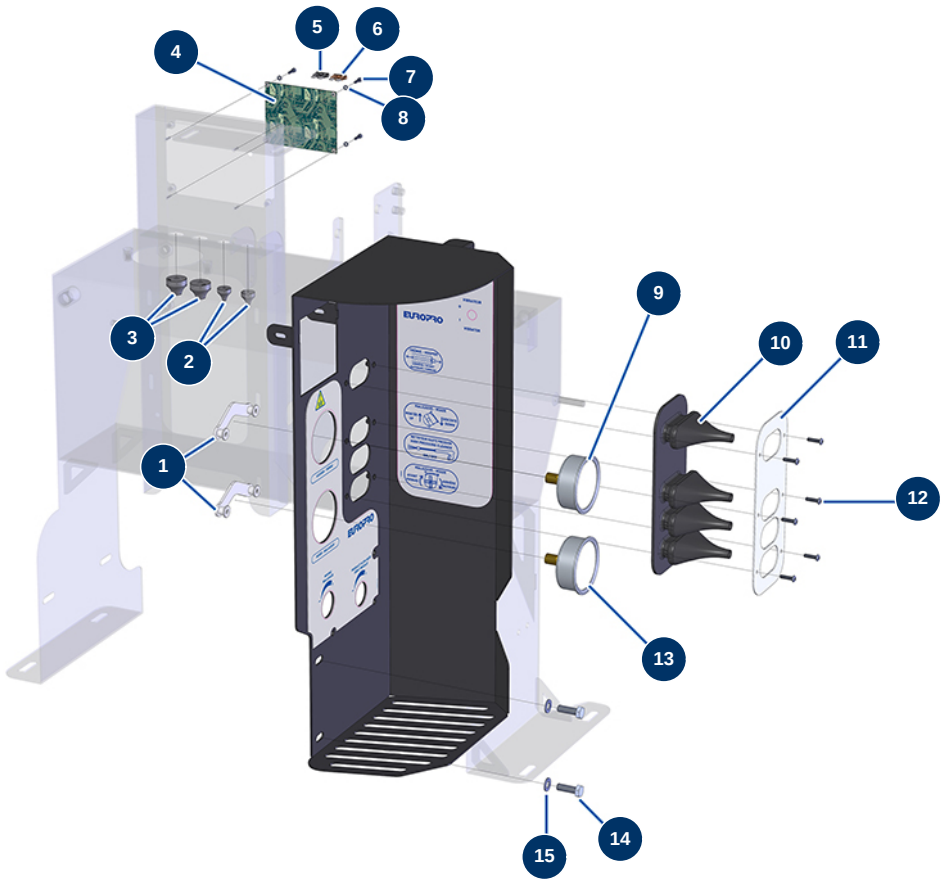

Détails des pièces

Pos.	Référence	Désignation
1	80195	Fixing U-blot for manometer Ø 63
2	11564	M 16 grey rubber cable gland
3	13632	M 20 grey rubber cable gland
4	12988	Safety electronic card - C.P 60
5	13079	Standard US 2A fuse - CP 60
6	13080	Standard US 5A fuse - CP 60
7	12249	3 x 12 cylindrical head screw
8	12108	ø 3 inox narrow washer
9	13207	Cylindrical 1/4 axial manometer 63 mm 0 to 250 bar - C.P 60
10	13114	4-lever distributor protective diaphragm - C.P 60
11	C20906	Support flange bellows control panel CP 60
12	11721	4 x 16 inox cylindrical pan head screw
13	12342	Cylindrical 1/4" axial manometer 63 mm 0 to 160 bar - C.P 60

Pos.	Référence	Désignation
14	11544	THEF 8 x 25 screw
15	30256	ø 8 inox narrow washer

X-PRO D60 spraying machine - Rear stabilizers option

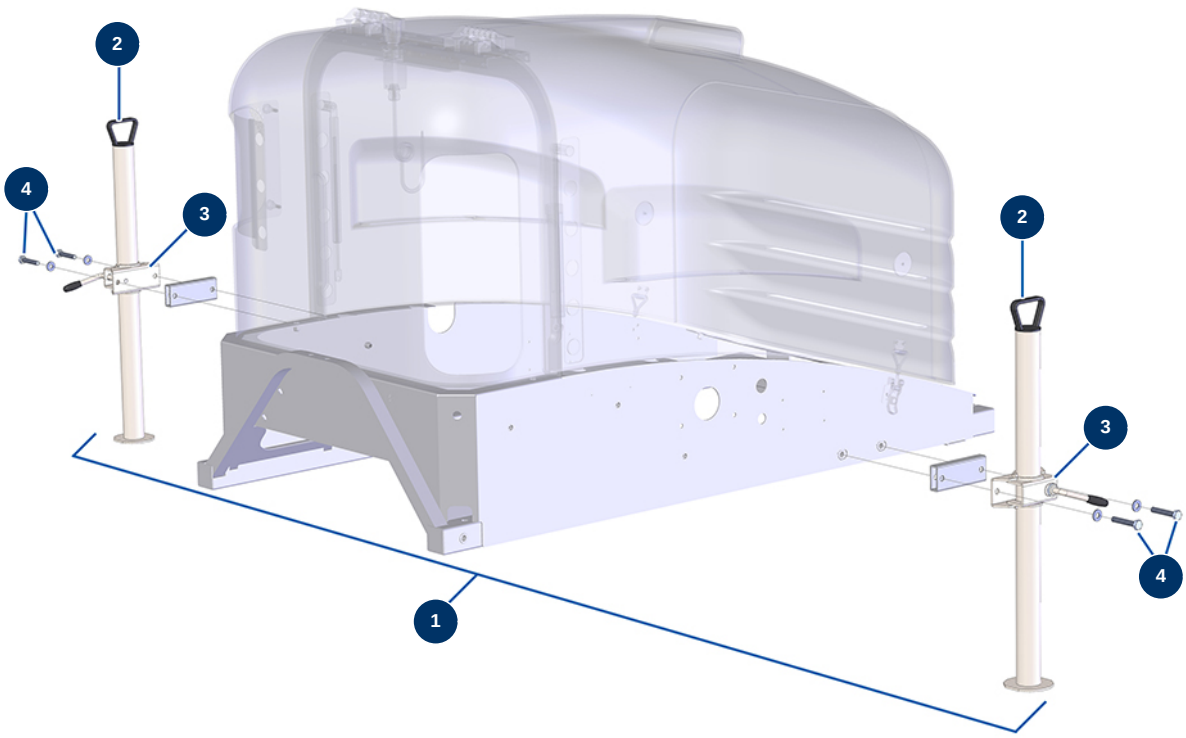

Détails des pièces

Pos.	Référence	Désignation
1	14372	Rear stabilizers option - CP 60, 80, 90 & 120
2	12401	Stabilizer Ø 48 Lg 700 mm - C.P 60
2	12401	Stabilizer Ø 48 Lg 700 mm - C.P 60
3	12400	Stabilizer fixing support Ø 48 - C.P 60
3	12400	Stabilizer fixing support Ø 48 - C.P 60
4	30261	THEF 10 x 60 screw
4	30261	THEF 10 x 60 screw

X-PRO D60 spraying machine - Lifting frame option

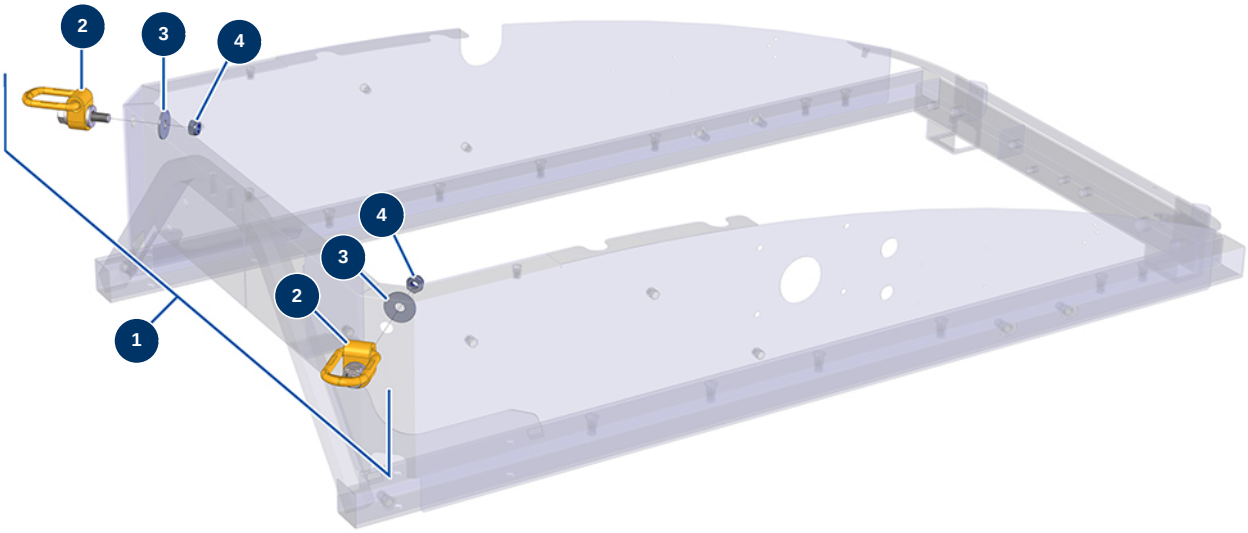

Détails des pièces

Pos.	Référence	Désignation
1	14431	Set of lifting accessories for towable Compact Pro
2	14432	Bolt-on lifting ring CMU 1T
2	14432	Bolt-on lifting ring CMU 1T
3	30294	ø 12 inox large washer
3	30294	ø 12 inox large washer
4	10051	M 12 nylstop nut
4	10051	M 12 nylstop nut

X-PRO D60 spraying machine - Air and product hoses - FACADE

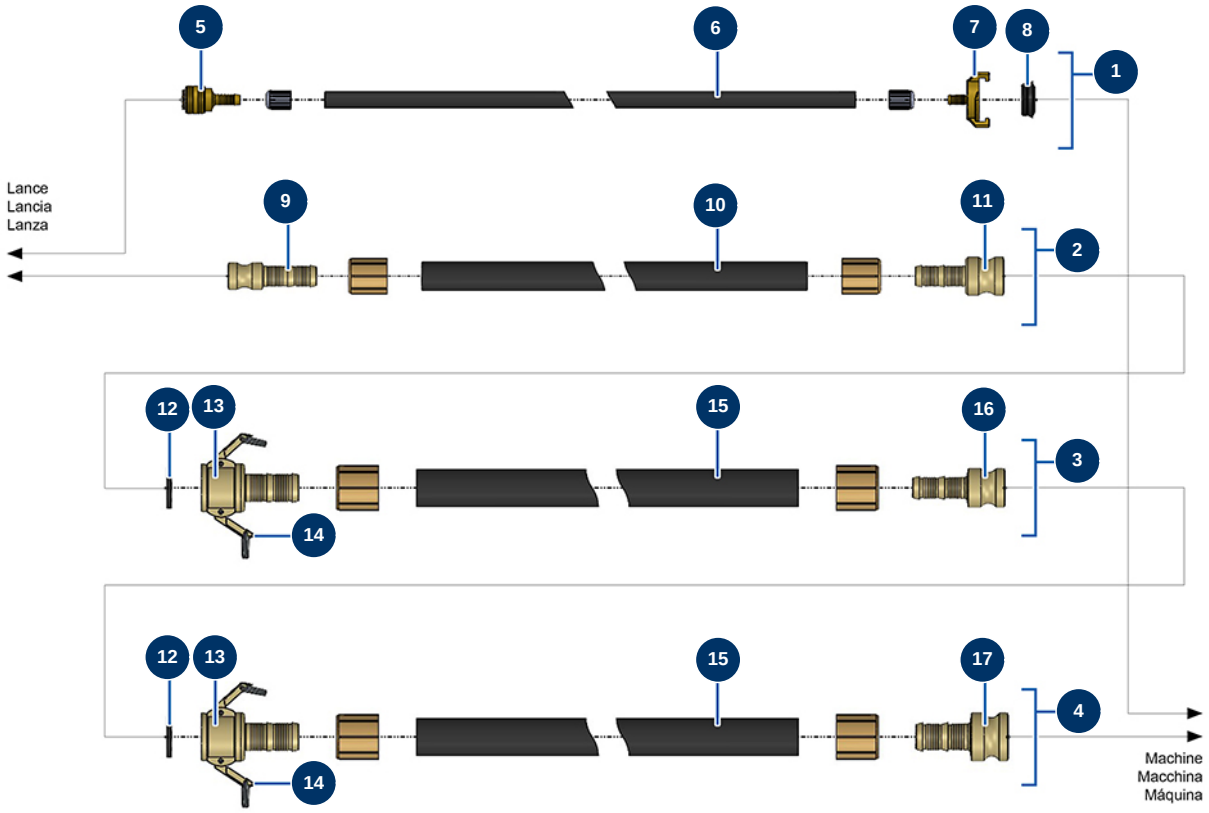

Détails des pièces

Pos.	Référence	Désignation
1	12529	Complete air hose Ø 10 x 33 m lance - CP 60
2	12525	Product hose ø 25 x 5 m with M35 x M25 couplings
3	12524	Product hose ø 35 x 13,3 m with M35 x F35 couplings
4	12523	Product hose ø 35 x 13,3 m with M50 x F35 couplings
5	70004	Female quick fit coupling with corrugated shank of 9
6	50016	ø 10-16 rubber air hose by the metre
7	13566	Corrugated Geka coupling of 10
8	12118	GEKA coupling gasket
9	12515	1" steel adapter, corrugated ø 25
10	10268	Spray hose 25 x 37 by the metre
11	12517	1"1/4 steel adapter, corrugated ø 25
12	12839	Steel cam coupler gasket of 35 - C.P 60
12	12839	Steel cam coupler gasket of 35 - C.P 60

Pos.	Référence	Désignation
13	12514	1"1/4 camlock steel coupling, corrugated ø 35 - CP 60
13	12514	1"1/4 camlock steel coupling, corrugated ø 35 - CP 60
14	90691	1"1/4 cam coupler
14	90691	1"1/4 cam coupler
15	11976	Spray hose 35 x 49 by the metre
15	11976	Spray hose 35 x 49 by the metre
16	12516	1"1/4 steel adapter, corrugated ø 35
17	12518	2" steel adapter, corrugated ø 35

X-PRO D60 spraying machine - Air and product hoses - MORTAR

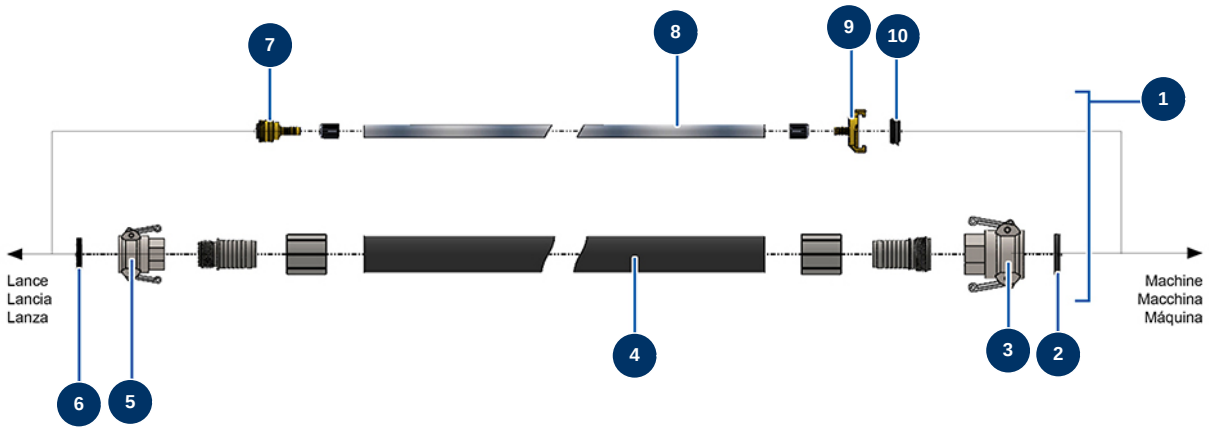

Détails des pièces

Pos.	Référence	Désignation
1	13619	ø 32 x 20 metres air product hose - CP 60 MORTAR
2	70015	1"1/4 cam coupler gasket
3	70006	1"1/4 camlock alu coupling, inner threaded 1"1/4 for 24P
4	10269	Spray hose 32 x 44 by the metre
5	70007	1" camlock alu coupling, inner threaded 1" for 6, 8, 14 & 24P
6	70014	1" cam coupler gasket
7	70004	Female quick fit coupling with corrugated shank of 9
8	50003	Clear braided PVC hose Ø 10 x 16 by the metre
9	13566	Corrugated Geka coupling of 10
10	12118	GEKA coupling gasket