COMPACT-PRO 25 spraying machine - Chassis

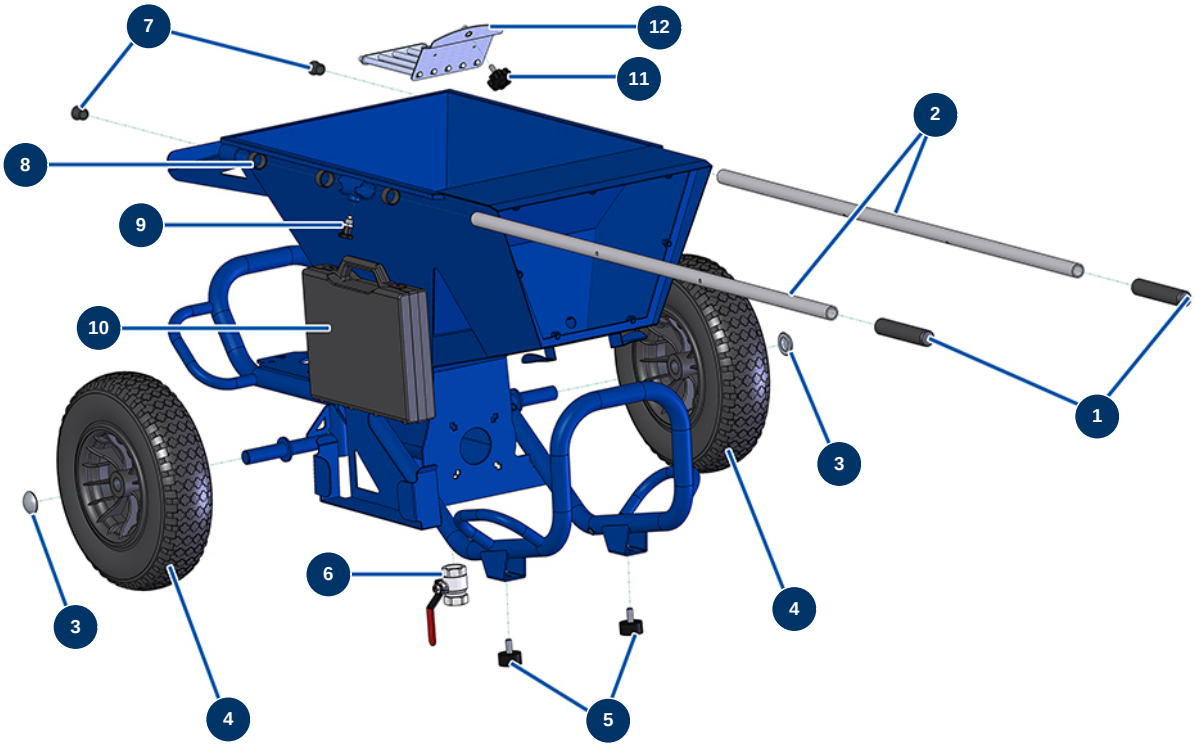

Détails des pièces

Pos.	Référence	Désignation
1	90255	Arm handle for EUROPRO 24P, E50 and E100
2	C21326	JETMIX 80 / Blowing machine arm
3	90282	Ø25 chromed clip
3	90282	Ø25 chromed clip
4	80003	Ø400 complete wheel with shaft of 25 for 100TH, MPE 300
4	80003	Ø400 complete wheel with shaft of 25 for 100TH, MPE 300
5	30145	Ø 40 x 20 M10 stop
6	70031	Drain valve for EUROPRO 4-6-8-14 P, MPE, AG, 7000z, 9000z
7	90870	Black plastic end cap for ø 25 round tube
8	13453	Cylindrical bearing 26/30 x 16
9	13454	M12 X 1.5 indexage pin
10	12045	Carry case for E.W.I. ABS spray lance
11	11514	Plastic thumb wheel M8 x 20

Pos.	Référence	Désignation
12	C22285	CP 25 detachable grid

COMPACT-PRO 25 spraying machine - Air circuit

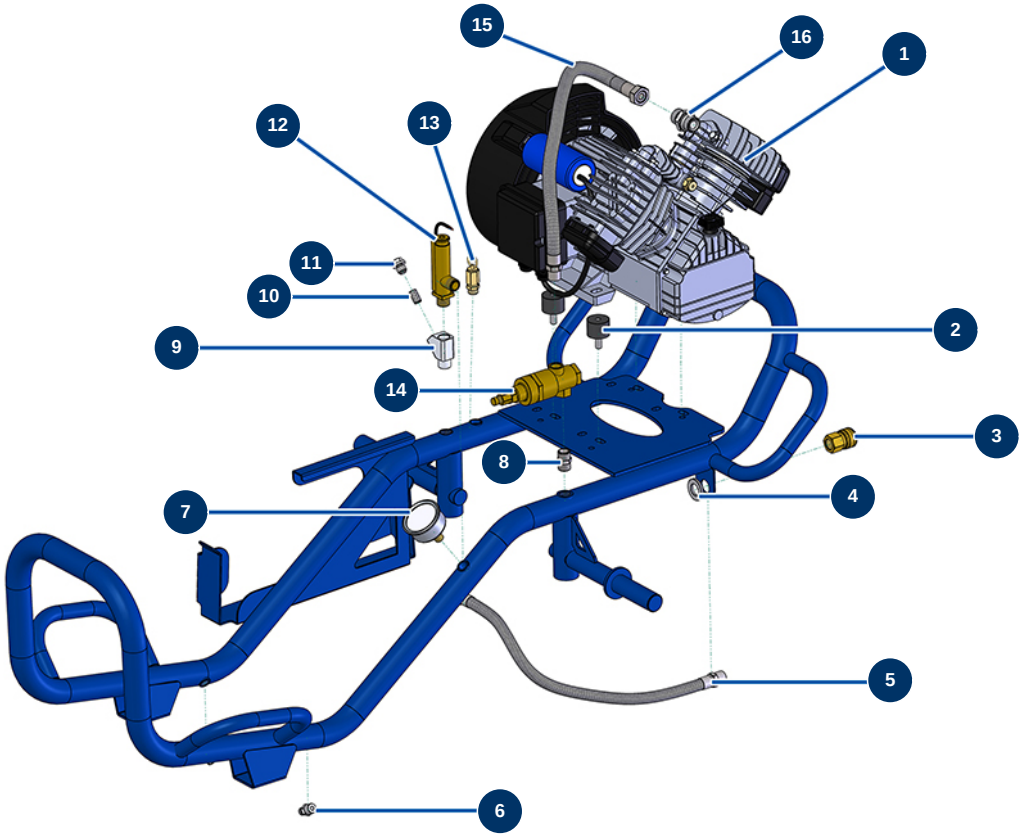

Détails des pièces

Pos.	Référence	Désignation
1	30154	Compression head for EUROPRO 30 and 30+
2	30151	Silentbloc ø 30 x 22 M-F8
3	70035	3/8" inner threaded female quick fit coupling
4	30288	ø 16 inox narrow washer
5	90488	ECO 130 flow meter air hose
6	30133	1/4" male compressor tank purge
7	80028	1/4 conical axial manometer - 50mm - 0 to 20 bar
8	30367	3/8" MaleC x 3/8" MaleC low-pressure nipple
9	M10322	Filter body for spraying machine
10	12502	50 meshes hopper filter
11	M10323	Spraying machine filter body plug
12	30005	Flowmeter for EUROPRO 4-6-8-14 and 24 P
13	80097	1/4" certified outer threaded safety valve 11 bar

Pos.	Référence	Désignation
14	101015	3/8" emptying autonomous valve
15	13766	Compressor outlet air hose for COMPACT-PRO 25
16	90627	1/2" MaleD x 1/2" MaleD high-pressure nipple

COMPACT-PRO 25 spraying machine - Transmission

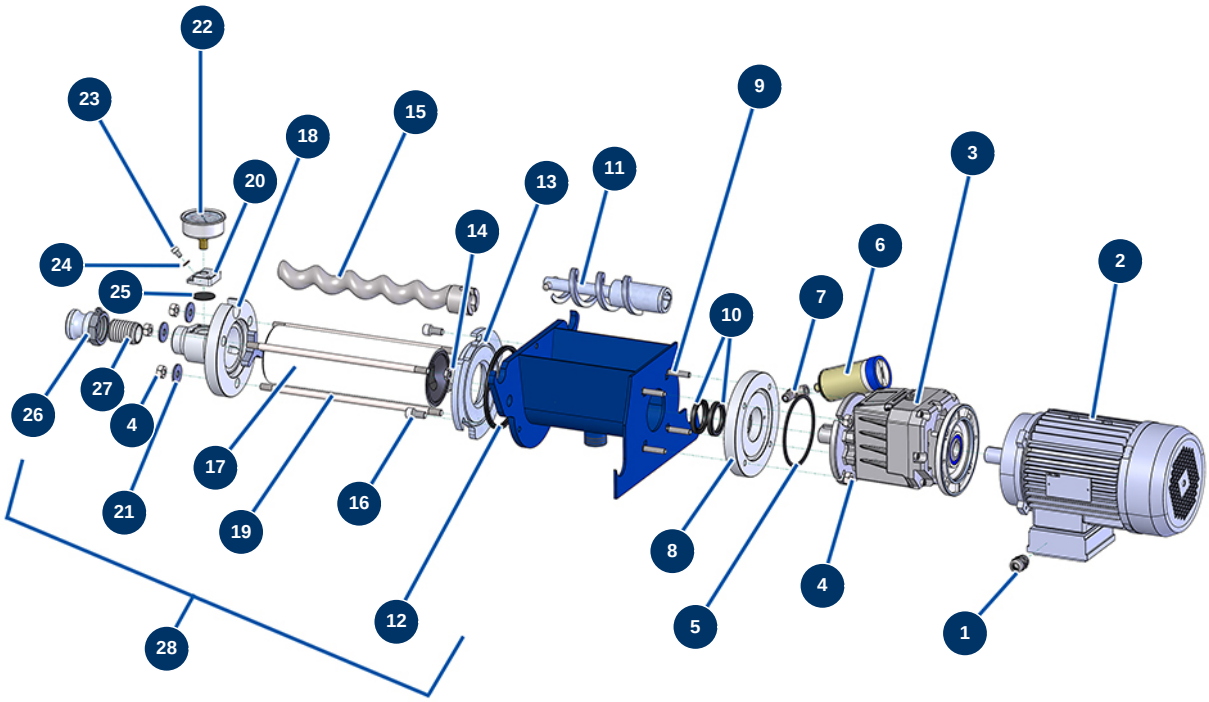

Détails des pièces

Pos.	Référence	Désignation
1	30082	Nickel plated watertight cable gland of 11
2	MI3D00200710	Electric motor 2,2 kW - T90 - B14 -2800 rpm - 400V
3	15155	Coaxial speed reducer - T412A - R18,04 - B14/T90
4	13978	M10 inox nut
4	13978	M10 inox nut
5	13692	CP25 motor flange seal
6	90639	Automatic greaser
7	30121	90° low-pressure elbow 1/4 MaleC x 1/4 FemaleD
8	M10510	CP25 motor flange
9	11561	Round head square neck stainless steel screw 8 x 40
10	70062	Spi seal 40 x 52 x 7 for 4,6,8P, AG, MPE, 7000z, 9000z
11	C21689	Complete drive shaft for CP 25
12	12506	4-lobes seal for JETPRO 80 flange

Pos.	Référence	Désignation
13	M10491	COMPACT-PRO 25 flange
14	13979	M10 flat inox nut
15	MI7009108300	MIXER 26 D4-2 pump rotor with bayonet head
16	80668	10 x 20 cylindrical head screw
17	MI3F00501300	MIXER 26 D4-2 pump stator
18	M10427	1" inner threaded stator flange
19	60010	Fastening tie rod for MAP 5/6
20	M10079	MIXPRO 14 cage cover
21	30293	ø 10 inox large washer
22	80070	Axial manometer 1/4" conical oil 50 mm 0 to 60 bar
23	90798	M6 x 10 cylindrical head screw - CP 60 cylindrical head screw
24	12765	Copper seal for JETPRO 80 pump nose
25	12913	Pump nose manometer membrane for JETPRO 80, 120, JETBAG 120
26	70012	1"1/4 inner threaded adapter for 24P
27	M10426	1" BSP outer threaded insert
28	13545	JETMIX MIXER 26 complete pump kit

COMPACT-PRO 25 spraying machine - Electrical box

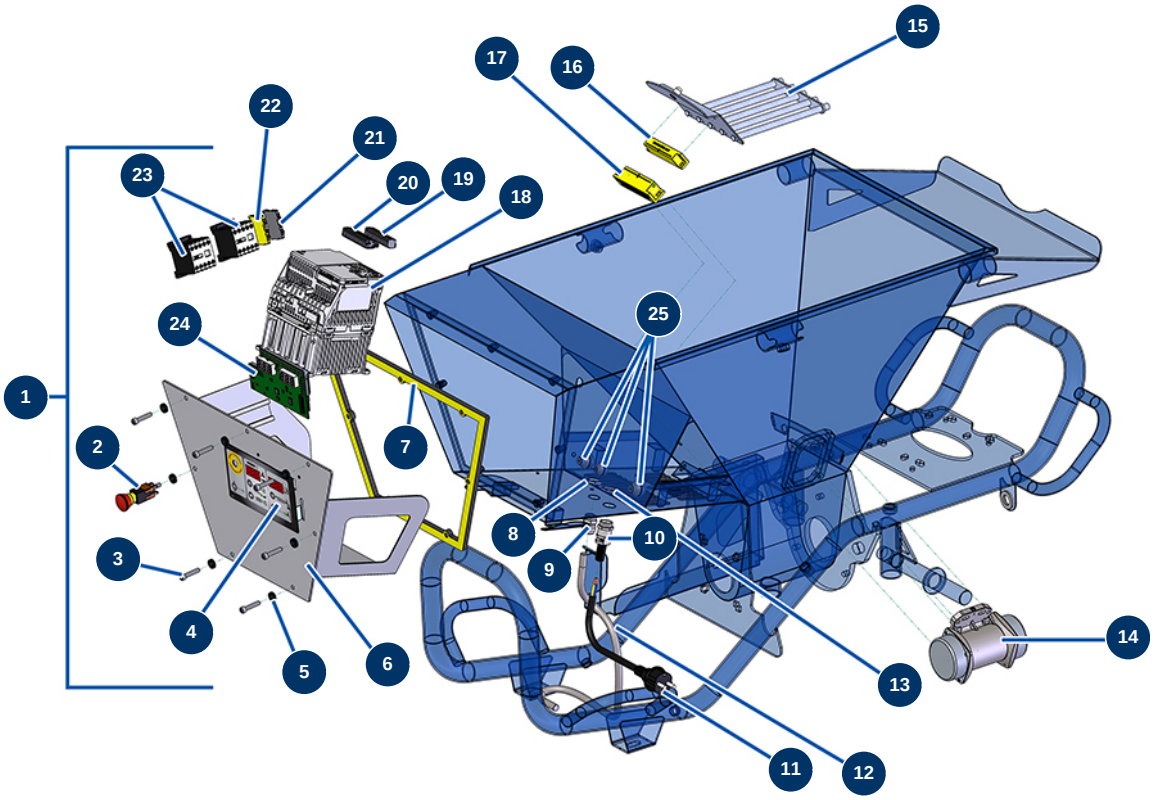

Détails des pièces

Pos.	Référence	Désignation
1	13627	Complete membrane electrical box for COMPACT-PRO 25
2	13015	Hanging EMERGENCY STOP button Ø16
3	90153	6 x 30 cylindrical head screw
4	13006	COMPACT PRO front with membrane
5	80573	Hollow washer Ø 6
6	C21534	6
7	13600	CP25 electrical box seal
8	30333	Cable gland locknut of 11 CEM
9	30040	Nickel plated watertight cable gland of 11 CEM
10	80451	Brass cable gland of 13 for power cable
11	90214	Power cable with molded plug 3G 2,5 mm²
12	90606	Shielded cable 4 x 1,5 by the metre
13	30054	Cable gland locknut of 13

Pos.	Référence	Désignation
14	11997	Single vibrator - 230V
15	C22285	CP 25 detachable grid
16	15073	
17	12120	Grid safety sensor for JETMIX, MIXPRO 14, 70 & 100
18	80459	Inverter 230 V - 2.2 KW
19	11772	12 pins female connector
20	11771	12 pins male connector
21	80467	Grey conductor block 4 mm²
22	30038	Yellow and green conductive block 6 mm²
23	11918	Coil contactor 24 Volt AC
24	30627	COMPACT-PRO 25 electronic card
25	13632	M 20 grey rubber cable gland

COMPACT-PRO 25 spraying machine - Hoses and extensions

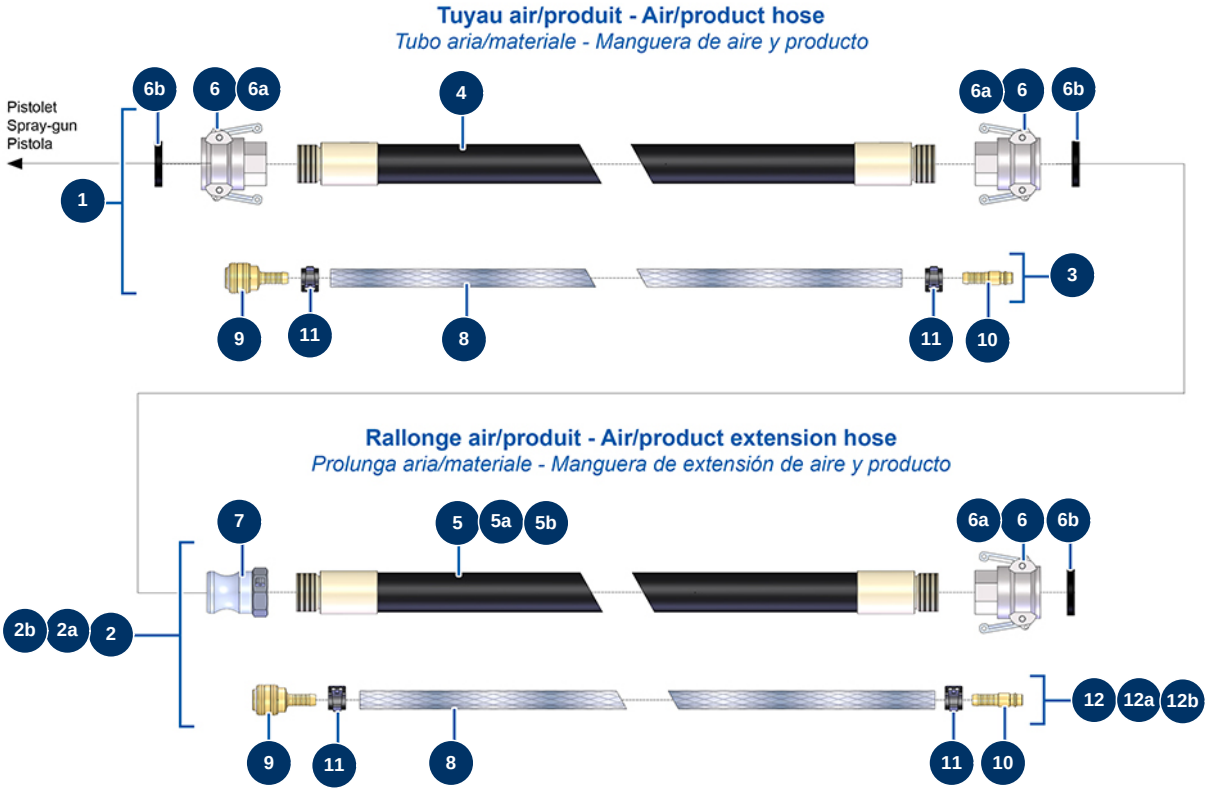

Détails des pièces

Pos.	Référence	Désignation
1	50026	ø 25 x 10 metres air product hose 14 P
2	50046	Air-product extension Ø25 x 5 m
2a	11633	Air-product extension Ø25 x 10 m
2b	12213	Air-product extension Ø25 x 15 m
3	91064	Complete air hose for lance 11,15 m 14P and 24P
4	50013	25 x 10 m product hose outer threaded 1"
5	50010	25 x 5 m product hose outer threaded 1"
5a	50013	25 x 10 m product hose outer threaded 1"
5b	50014	25 x 15 m product hose outer threaded 1" without couplers
6	70007	1" camlock alu coupling, inner threaded 1" for 6, 8, 14 & 24P
6	70007	1" camlock alu coupling, inner threaded 1" for 6, 8, 14 & 24P
6	70007	1" camlock alu coupling, inner threaded 1" for 6, 8, 14 & 24P
6a	90689	1" cam coupler

Pos.	Référence	Désignation
6a	90689	1" cam coupler
6a	90689	1" cam coupler
6b	70014	1" cam coupler gasket
6b	70014	1" cam coupler gasket
6b	70014	1" cam coupler gasket
7	70002	1" inner threaded adapter for 4 to 14P
8	50003	Clear braided PVC hose Ø 10 x 16 by the metre
8	50003	Clear braided PVC hose Ø 10 x 16 by the metre
9	70004	Female quick fit coupling with corrugated shank of 9
9	70004	Female quick fit coupling with corrugated shank of 9
10	70018	Corrugate male quick fit coupling of 9
10	70018	Corrugate male quick fit coupling of 9
11	12218	Spring collar Ø 15
11	12218	Spring collar Ø 15
11	12218	Spring collar Ø 15
11	12218	Spring collar Ø 15
12	91062	Complete air hose for lance 5,25 m 4P
12a	91064	Complete air hose for lance 11,15 m 14P and 24P
12b	13203	Complete air hose for lance 15,85 m

COMPACT-PRO 25 spraying machine - Spraying lance

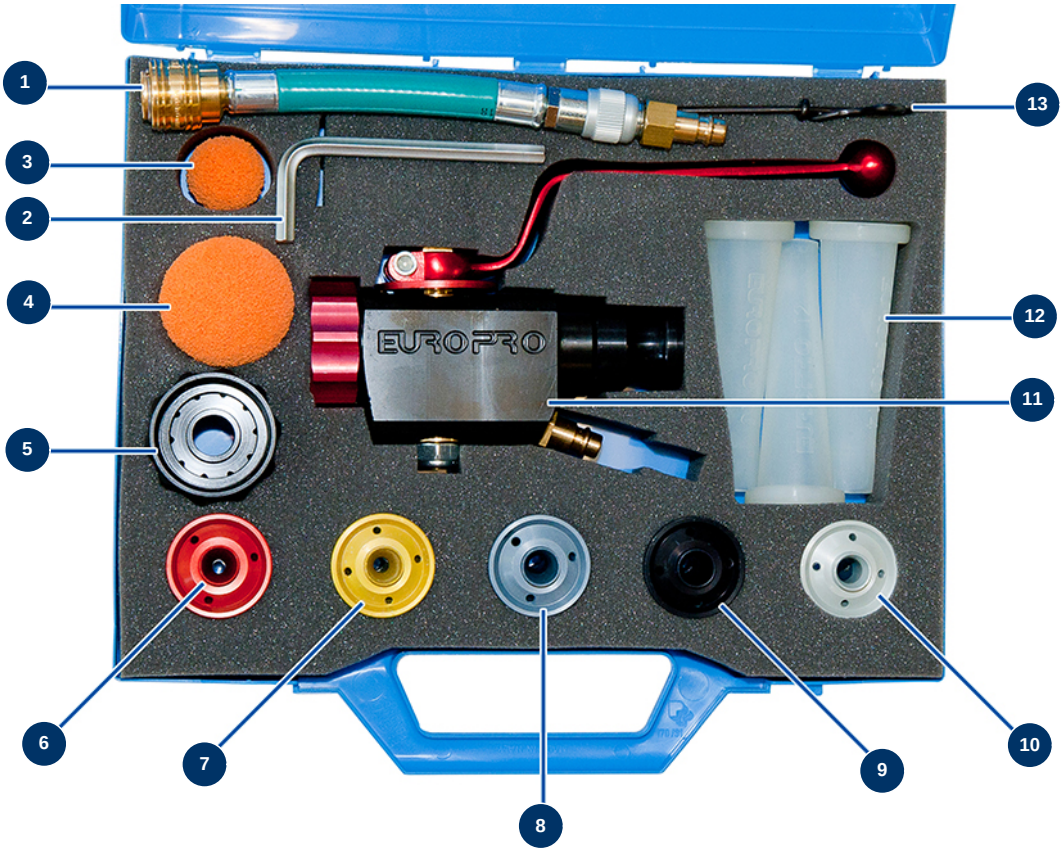

Détails des pièces

Pos.	Référence	Désignation
1	11414	Air regulation kit for COMPACT-PRO 30 spray lance
2	101013	7mm Allen key
3	20005	Cleaning ball ø 30
4	90566	Cleaning ball Ø 50
5	M10062	Exhaust air ring
6	10045	Red nozzle Ø 5mm
7	10046	Yellow nozzle Ø 6mm
8	10047	Anthracite nozzle Ø 7mm
9	10048	Black nozzle Ø 8mm
10	10050	Grey nozzle Ø 10mm
11	12270	8, 14 and 24P ABS spraying lance
12	11759	Set of grouting nozzles Ø 10, 12, 14
13	90605	Tube brush